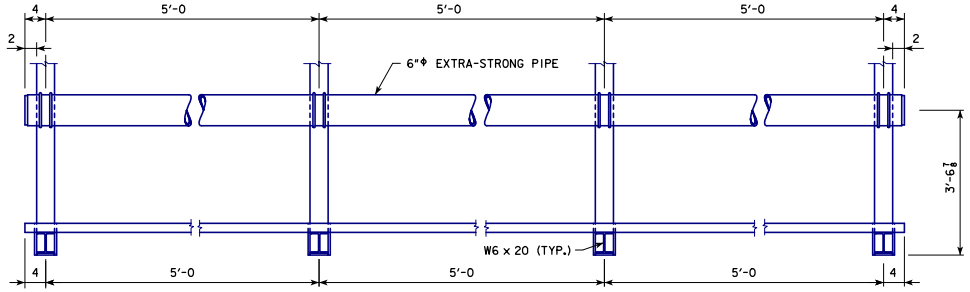

PART ELEVATION VIEW

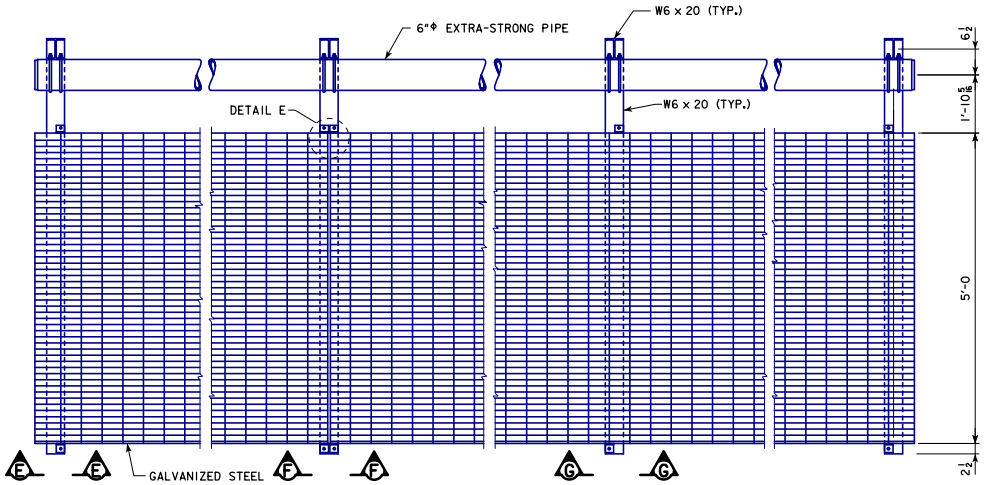

PART PLAN VIEW

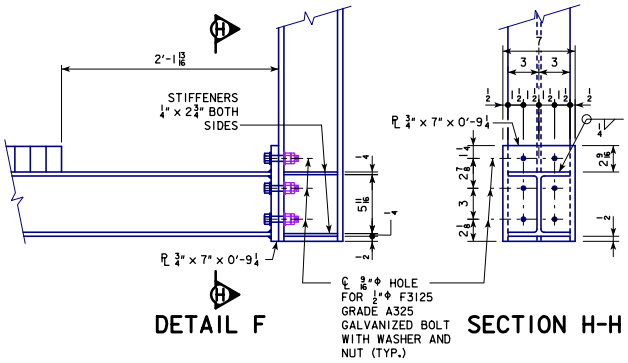

DETAIL F

SECTION H-H

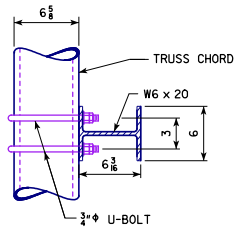

SECTION J-J

U-BOLT DETAIL

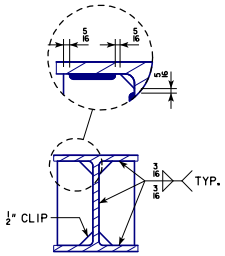

TYPICAL STIFFENER DETAIL

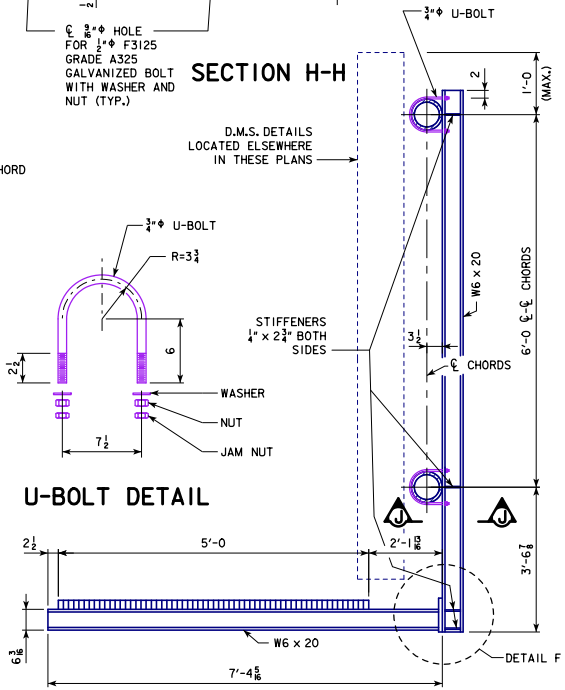

TYPICAL WORK PLATFORM SECTION

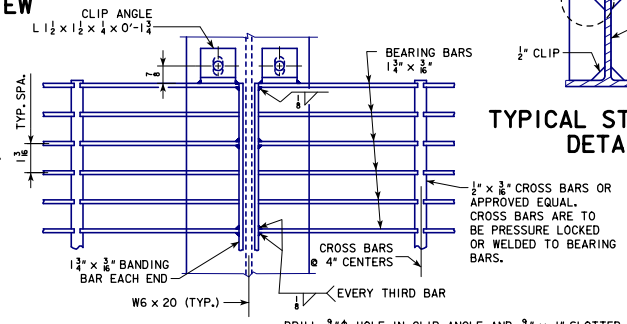

DETAIL E

DRILL 9/16"Φ HOLE IN CLIP ANGLE AND 9/16" x 1" SLOTTED HOLE IN W6 x 20 FOR 1/2"Φ F3125 GRADE A325 GALVANIZED BOLT WITH WASHERS, NUT AND JAM NUT. (AN A449 BOLT IS REQUIRED IF REGULAR NUT IS SUBSTITUTED FOR JAM NUT.) ADJUST CLIP SO GRATING BEARS ON BEAM.

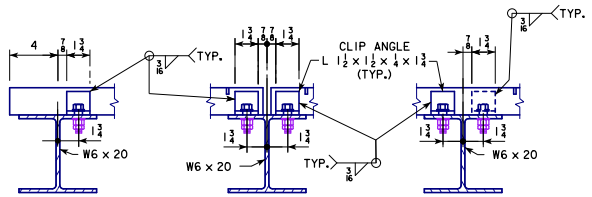

SECTION E-E SECTION F-F SECTION G-G

03-2019 LATEST REVISION DATE	APPROVED BY BRIDGE ENGINEER	IOWA DOT Highway Division
		STANDARD DESIGN ROADSIDE DYNAMIC MESSAGE SIGN (DMS) SUPPORT APRIL, 2013
		WORK PLATFORM DETAILS — RDMS-03-13

•REVISED 03-2019: CHANGED U-BOLT CONNECTION TO IMPROVE CONSTRUCTABILITY. (U-BOLT LEG DIMENSION SHORTENED FROM 1'-0 TO 6". U-BOLT THREAD LENGTH CHANGED FROM 3" TO 2 1/2". ELIMINATED HOLES IN W6 x 20 FLANGE FURTHEST FROM CHORD.) CHANGED DETAIL D LABEL TO DETAIL E. CHANGED DETAIL E LABEL TO DETAIL F. MODIFIED GRATING CLIP ANGLE FASTENER NOTE TO ADDRESS CHANGE IN ASTM SPECIFICATIONS. ADDED CLIP ANGLE FASTENER DETAIL TO IMPROVE CLARITY. MODIFIED DETAIL F / SECTION H-H FASTENER NOTE TO ADDRESS CHANGE IN ASTM SPECIFICATIONS. ADDED DETAIL F FASTENER DETAIL TO IMPROVE CLARITY. CHANGED W6 x 20 DEPTH FROM 6" TO 6 5/8" TO INCREASE ACCURACY. UPDATED BRIDGE ENGINEER SIGNATURE.
•ROADSIDEDMSSUPPORT.DGN - RDMS-03-13 - THIS SHEET ISSUED 04-2013.