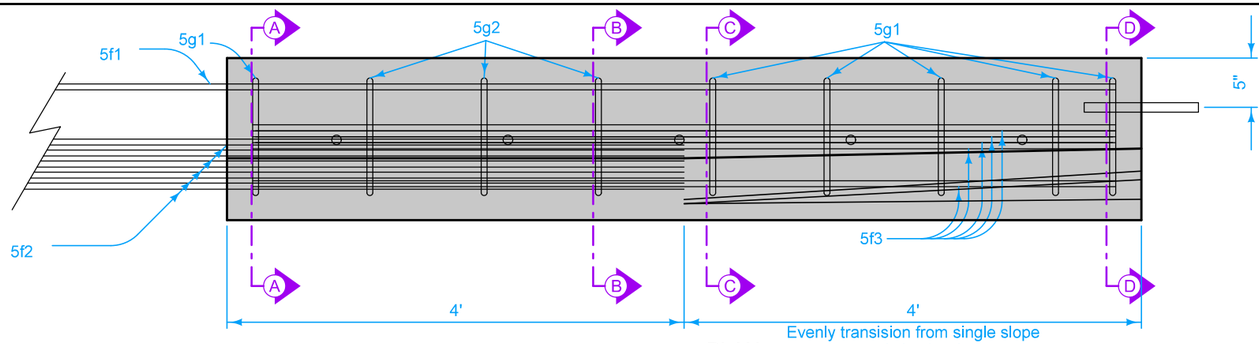

PLAN

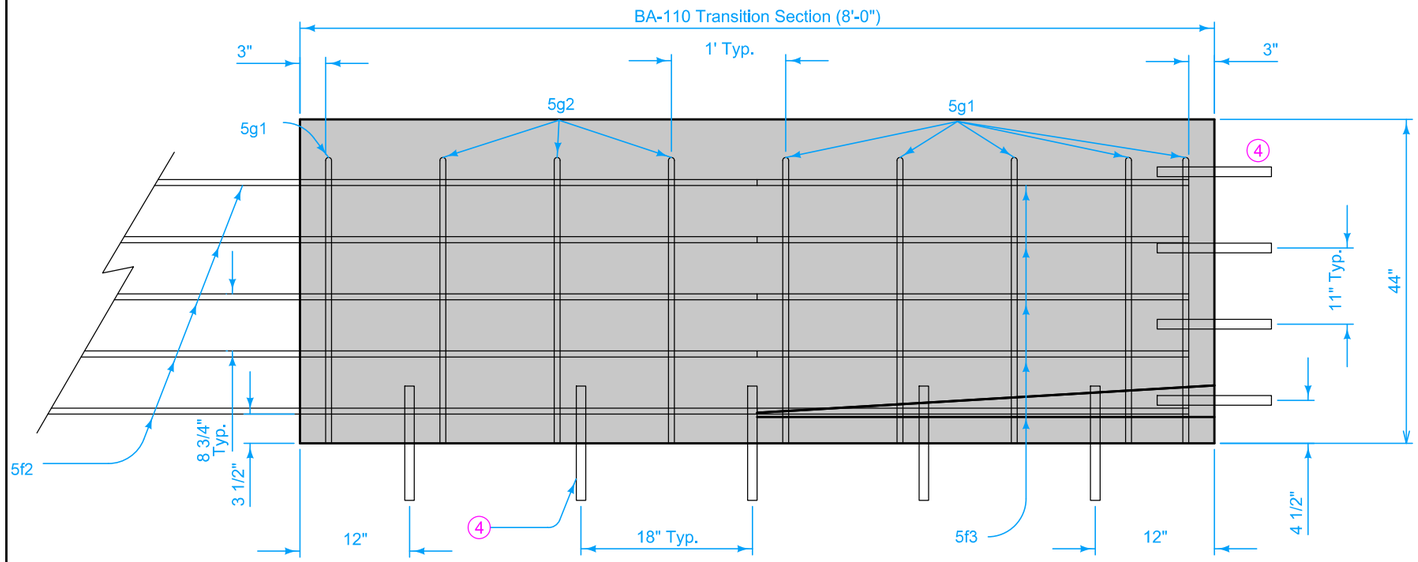

ELEVATION

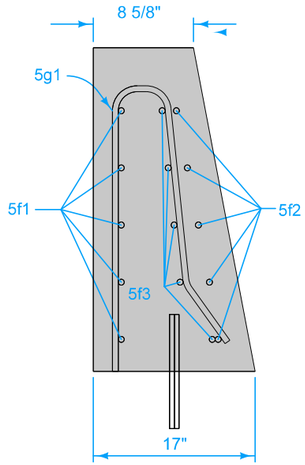

SECTION A-A

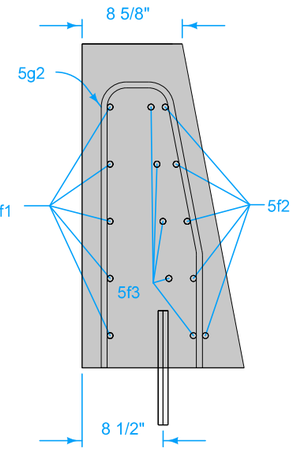

SECTION B-B

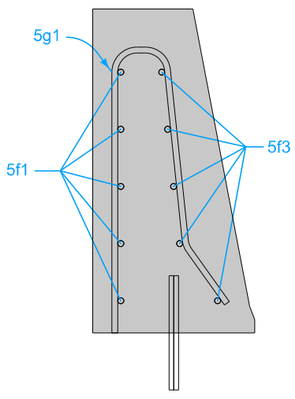

SECTION C-C

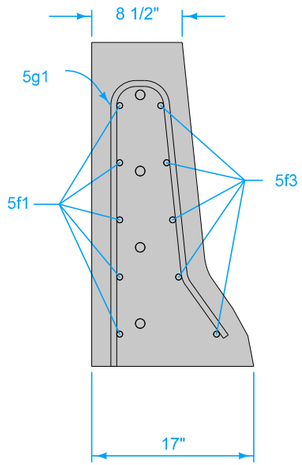

SECTION D-D

CONCRETE QUANTITIES
Per Section
1.06 cy

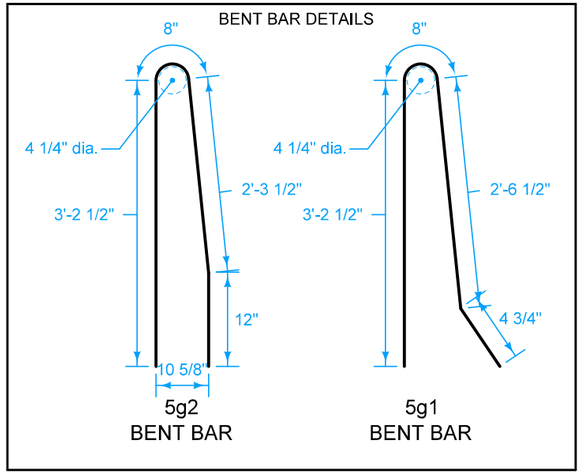

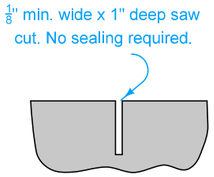

SAWED CONTRACTION JOINT

Saw cut top and front face.
Saw cut back if exposed.

REINFORCING BAR LIST

BAR	LOCATION	SHAPE	NO.	LENGTH	WEIGHT
5g1	VERTICAL	⌈⌉	6	7' 3"	49.0
5g2	VERTICAL	⌈⌉	3	7'-2"	22.4
5f1	HORIZONTAL	——	5	11'-9 " *	61.2
5f2	HORIZONTAL	——	5	7'-9" *	40.4
5f3	HORIZONTAL	——	5	7'-8"	40.0
TOTAL WEIGHT (LBS.)					213

* Minimum length

Use Grade 60 epoxy - coated reinforcing bars. Provide 2 inches minimum cover. Anchor all reinforcement to prevent movement. Secure each section at the front, back, and at 3"-6" intervals using a method approved by the Engineer.

(1) Expansion joints are necessary only where specifically required by project plans. Conform expansion material to the shape of the barrier. No sealer is required.

(2) Where abutting sections are placed as separate pours, a butt joint may be used. Extend longitudinal reinforcement into the abutting section a minimum of 3 feet.

(3) Fillet all exposed corners with a $\frac{3}{4}$ inch dressed and beveled strip.

(4) Use 1 inch diameter deformed dowel bars of sufficient length to ensure 6 inch minimum embedment in barrier and supporting surface. Install dowels either in supporting surface when placed, or in drilled holes using polymer grout complying with Materials I.M. 491.11 or hydraulic cement grout complying with Materials I.M. 491.13.

Possible Contract Item:
Concrete Barrier, BA-112

Possible Tabulation:
108-18B

IOWA DOT

STANDARD ROAD PLAN

REVISION
NEW 10-15-24

BA-112

SHEET 1 of 1

REVISIONS: New

APPROVED BY DESIGN METHODS ENGINEER

CONCRETE BARRIER
44" SINGLE SLOPE TO 44" F-SHAPE
(HALF SECTION)