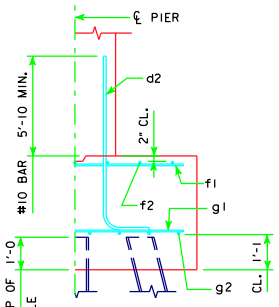

TYPICAL SECTION

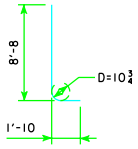

d2

NOTE: D = PIN DIAMETER.
DIMENSIONS ARE OUT TO OUT.

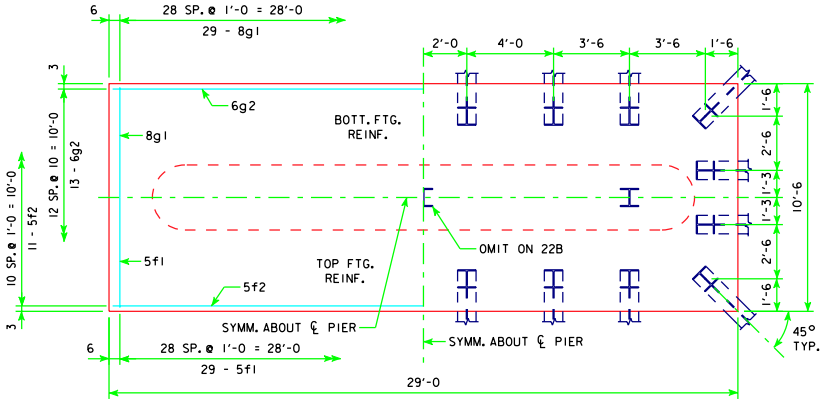

4'-0 x 10'-6 x 29'-0 FOR 22B & 23B

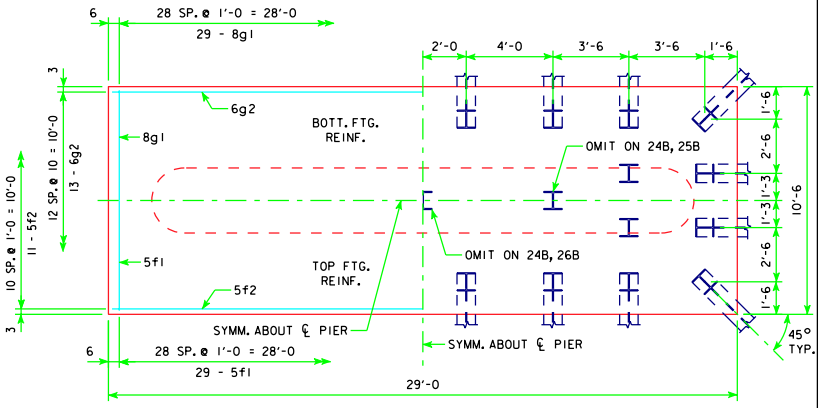

4'-0 x 10'-6 x 29'-0 FOR 24B, 25B & 26B

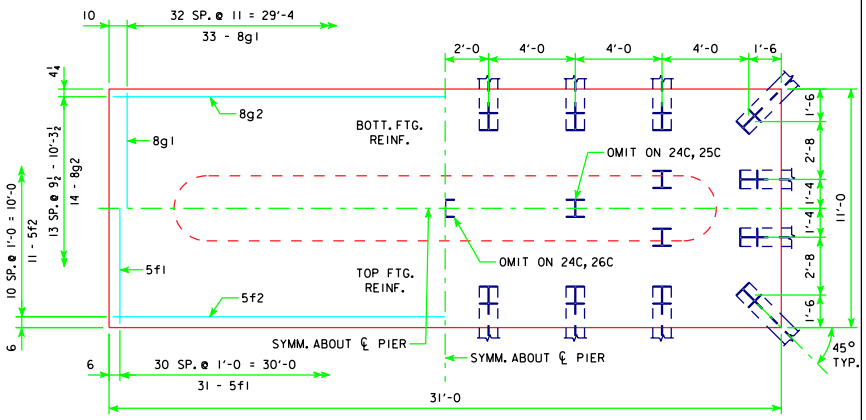

4'-0 x 11'-0 x 31'-0 FOR 24C, 25C, 26C & 27A

H IN FT.	℄ - ℄ ABUT. BRG.	PILING (HP10x57) NO. & LAYOUT	(1) DES. BRG. (TONS)	(2) LRFD DES. BRG. (KIPS)	FOOTING SIZE
25 TO 27	201'-4	22B	50	143	4' x 10'-6 x 29'
	213'-10	23B	50	144	
	226'-4	24B	49	142	
	243'-0	25B	50	144	
28 TO 30	201'-4	22B	50	147	4' x 10'-6 x 29'
	213'-10	24B	48	140	
	226'-4	24B	50	145	
	243'-0	25B	50	147	
31 TO 33	201'-4	23B	50	145	4' x 10'-6 x 29'
	213'-10	24B	49	142	
	226'-4	25B	50	144	
	243'-0	26B	50	144	
34 TO 36	201'-4	24C	48	139	4' x 11' x 31'
	213'-10	24C	50	144	
	226'-4	25C	50	145	
	243'-0	26C	50	145	
37 TO 40	201'-4	24C	50	143	4' x 11' x 31'
	213'-10	25C	50	143	
	226'-4	26C	50	144	
	243'-0	27A	50	145	

FOOTING NOTES:

THESE FOOTINGS ARE DESIGNED AND DETAILED TO BE USED WITH THE CAP AND COLUMN DETAILS OF THE TEE PIERS AS SHOWN ON SHEET H40-81-06.

BATTER PILES IN EXTERIOR ROWS 1:4 IN THE DIRECTION SHOWN.

STEEL PILING USED AS POINT BEARING SHALL HAVE A MINIMUM DISTANCE OF APPROXIMATELY 10 FEET FROM BOTTOM OF FOOTING TO TOP OF BEARING ROCK. THE PILE LAYOUTS ARE SUCH THAT THE DISTANCE CENTER TO CENTER OF ADJACENT PILING SHALL NOT EXCEED 8'-0.

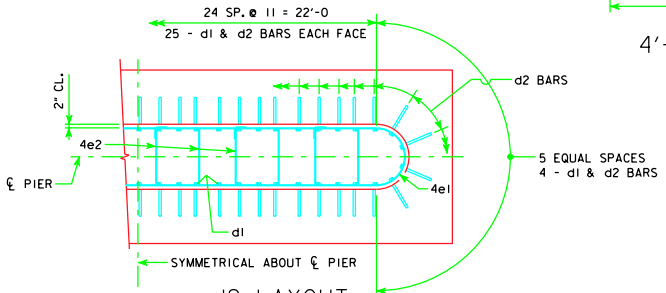

d2 LAYOUT
(SEE SECTION A-A ON SHEET H40-81-06.)

(1) FOR DETERMINING ACTUAL PILE LENGTHS IN FIELD.

(2) FOR ESTIMATING PILE LENGTHS USING AASHTO LRFD SPECIFICATIONS.

FOOTING SIZE	REINFORCING STEEL (ONE FOOTING) BAR	NO., SIZE & SPACING	LENGTH	WEIGHT (LB.)	TOTAL WEIGHT (LB.)	STRUCTURAL CONCRETE (CY)
4' x 10'-6 x 29'	d2	58 - #10 AS SHOWN	10'-6	2621	4605	45.1
	f1	29 - #5 @ 1'-0	10'-2	308		
	f2	11 - #5 @ 1'-0	28'-8	329		
	g1	29 - #8 @ 1'-0	10'-2	787		
	g2	13 - #6 @ 0'-10	28'-8	560		
4' x 11' x 31'	d2	58 - #10 AS SHOWN	10'-6	2621	5404	50.5
	f1	31 - #5 @ 1'-0	10'-8	345		
	f2	11 - #5 @ 1'-0	30'-8	352		
	g1	33 - #8 @ 0'-11	10'-8	940		
	g2	14 - #8 @ 0'-9½	30'-8	1146		

REVISED 01-10 - ADDED FOOTING NOTES.

01-10
LATEST REVISION DATE

APPROVED BY BRIDGE ENGINEER

Iowa Department of Transportation
Highway Division

STANDARD DESIGN - 40' ROADWAY, THREE SPAN BRIDGE
PRETENSIONED PRESTRESSED CONCRETE BEAM BRIDGES
AUGUST, 2009

TEE PIER - 50 TON STEEL PILE FOOTINGS
45° SKEW - H=25' TO 40'

H40-84-06