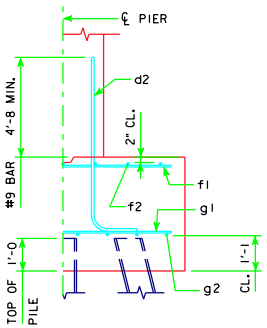

TYPICAL SECTION

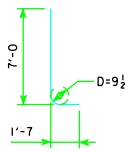

d2

NOTE: D = PIN DIAMETER.
DIMENSIONS ARE OUT TO OUT.

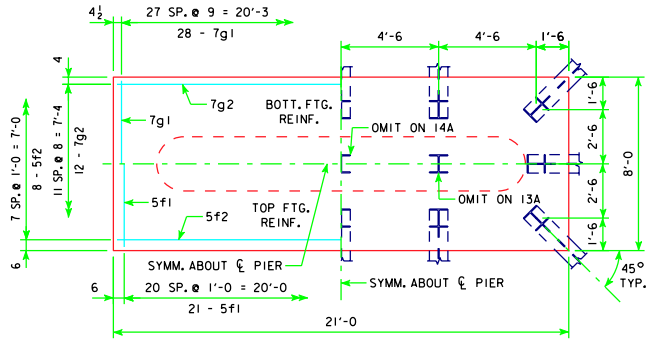

3'-6 x 8'-0 x 21'-0 FOR 13A, 14A & 15A

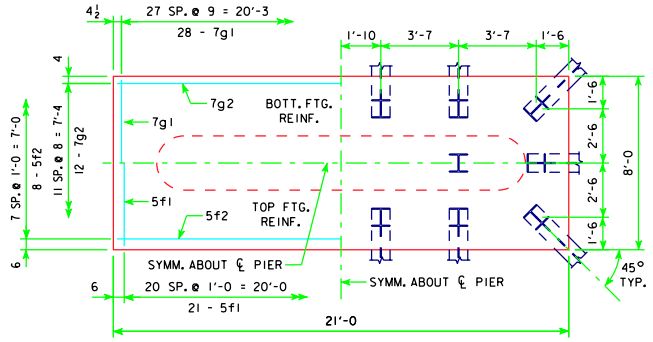

3'-6 x 8'-0 x 21'-0 FOR 16A

H IN FT.	℄ - ℄ ABUT. BRG.	PILING (HP10x57) NO. & LAYOUT	① DES. BRG. (TONS)	② LRFD DES. BRG. (KIPS)	FOOTING SIZE
16 TO 18	201'-4	13A	74	213	3'-6 x 8' x 21'
	213'-10	14A	72	207	
	226'-4	14A	75	217	
	243'-0	15A	75	217	
19 TO 21	201'-4	13A	75	217	3'-6 x 8' x 21'
	213'-10	14A	73	212	
	226'-4	15A	74	213	
	243'-0	16A	70	202	
22 TO 24	201'-4	14A	72	208	3'-6 x 8' x 21'
	213'-10	14A	75	216	
	226'-4	15A	75	217	
	243'-0	16A	71	206	

FOOTING SIZE	REINFORCING STEEL (ONE FOOTING) BAR	NO., SIZE & SPACING	LENGTH	WEIGHT (LB.)	TOTAL WEIGHT (LB.)	STRUCTURAL CONCRETE (CY)
3'-6 x 8' x 21'	d2	44 - #9 AS SHOWN	8'-7	1284	2570	21.8
	f1	21 - #5 @ 1'-0	7'-8	168		
	f2	8 - #5 @ 1'-0	20'-8	172		
	g1	28 - #7 @ 0'-9	7'-8	439		
	g2	12 - #7 @ 0'-8	20'-8	507		

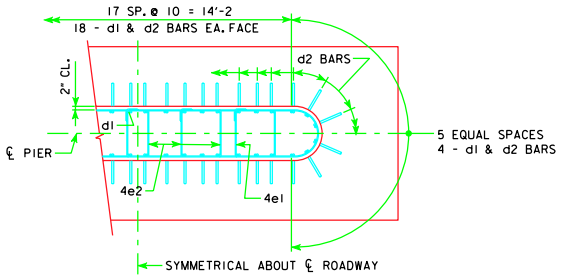

d2 BAR LAYOUT
(SEE SECTION A-A ON SHEET H40-57-06.)

① FOR DETERMINING ACTUAL PILE LENGTHS IN FIELD.

② FOR ESTIMATING PILE LENGTHS USING AASHTO LRFD SPECIFICATIONS.

FOOTING NOTES:

THESE FOOTINGS ARE DESIGNED AND DETAILED TO BE USED WITH THE CAP AND COLUMN DETAILS OF THE TEE PIERS AS SHOWN ON SHEET H40-57-06.

BATTER PILES IN EXTERIOR ROWS 1:4 IN THE DIRECTION SHOWN.

STEEL PILING USED AS POINT BEARING SHALL HAVE A MINIMUM DISTANCE OF APPROXIMATELY 10 FEET FROM BOTTOM OF FOOTING TO TOP OF BEARING ROCK. THE PILE LAYOUTS ARE SUCH THAT THE DISTANCE CENTER TO CENTER OF ADJACENT PILING SHALL NOT EXCEED 8'-0.

01-10
LATEST REVISION DATE

APPROVED BY BRIDGE ENGINEER

Iowa Department of Transportation
Highway Division

STANDARD DESIGN - 40' ROADWAY, THREE SPAN BRIDGE

PRETENSIONED PRESTRESSED CONCRETE BEAM BRIDGES

AUGUST, 2009

TEE PIER - 75 TON STEEL PILE FOOTINGS

0° SKEW - H=16' TO 24'

H40-61-06

REVISED 01-10 - ADDED FOOTING NOTES.