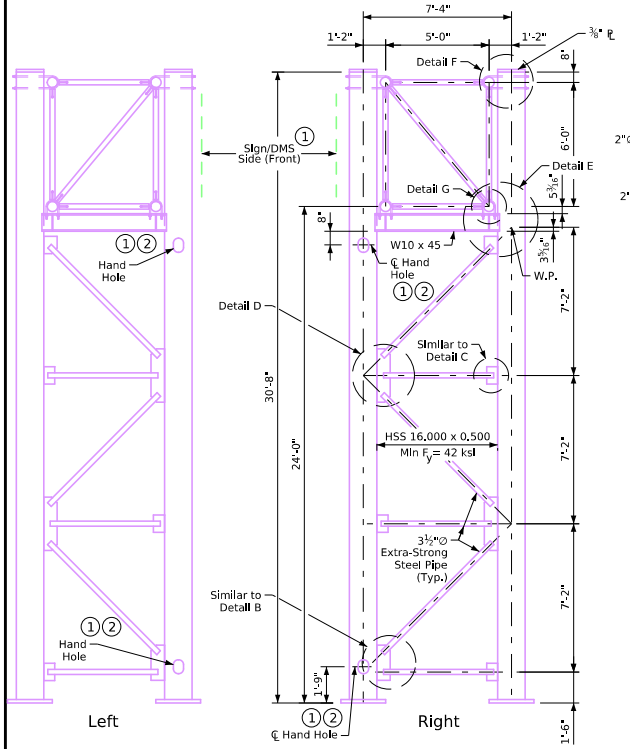

End View of Truss Supports

② Hand holes shall be located only in posts that are closest to dynamic message sign and be positioned on side opposite traffic.

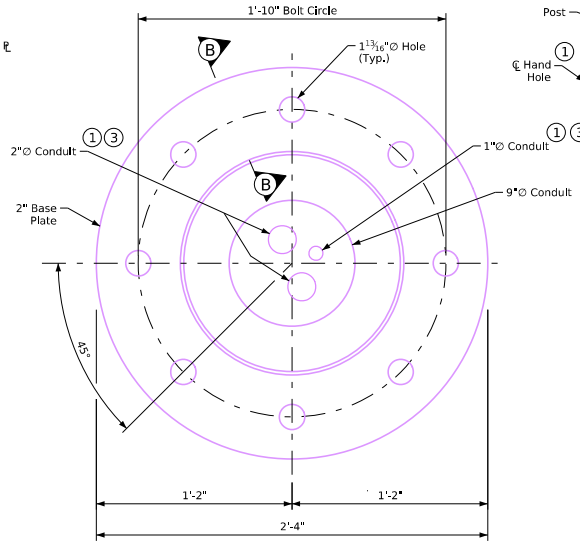

Base Plate Plan

③ Conduit is present only in posts with hand holes.

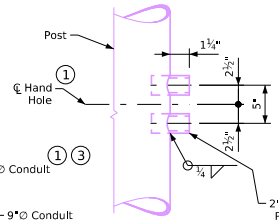

Electrical Inlet

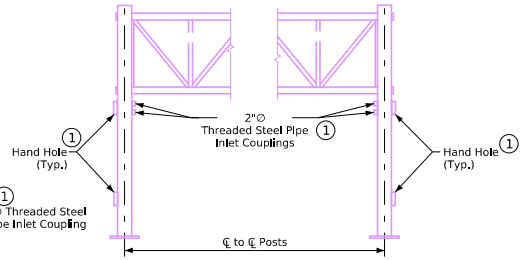

Part Elevation

① For DMS Trusses Only

Hand holes, conduit, and pipe inlet couplings are to be included on DMS truss designs only. See Standard Sheet SOST-18-11 for foundation conduit location details.

Hand holes and electrical inlet holes shall be located in both truss supports unless otherwise indicated on detail project plans. Locate holes only in posts that are closest to dynamic message sign.

Threaded steel pipe inlet couplings are to be placed opposite to upper hand hole on post. Couplings shall be fitted with standard plugs until conduit is installed.

All conduit shall be Schedule 40 plastic.

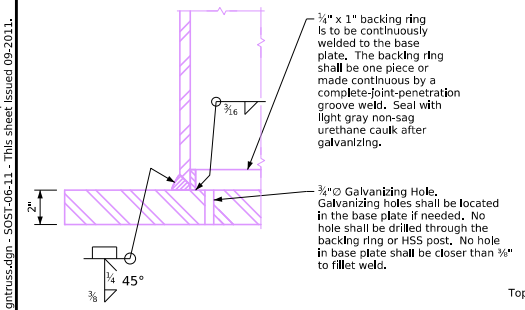

Section B-B

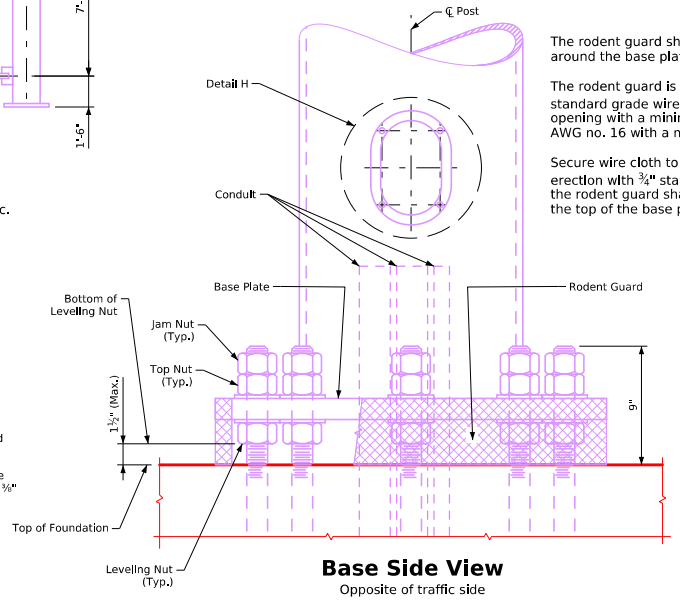

The rodent guard shall be placed around the base plate.

The rodent guard is stainless steel standard grade wire cloth, ¼" maximum opening with a minimum wire diameter of AWG no. 16 with a minimum 2" lap.

Secure wire cloth to base plate after erection with ¾" stainless steel banding. the rodent guard shall not extend above the top of the base plate.

See Standard Sheet SOST-08-11 for Details B, C, D and E.

See Standard Sheet SOST-09-11 for Details F and G.

Base Side View

Opposite of traffic side

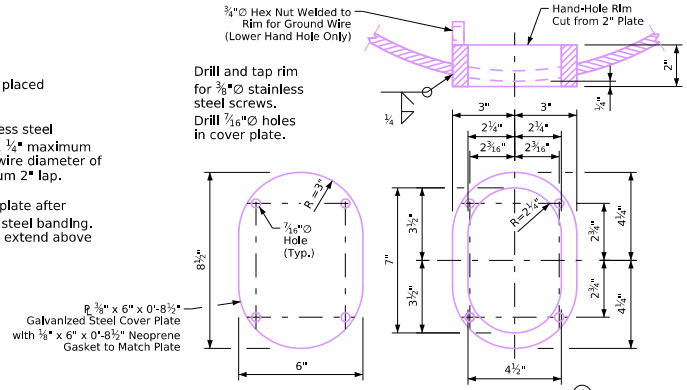

Detail H ①

06-2025 Latest Revision Date	Approved by Bridge Engineer	IOWA DOT Standard Design **Steel Overhead Sign Truss** September, 2011
		Support Post Base and DMS Electrical Access Details 105'-130' Spans
		SOST-07-11

- Revised 04-2020: Changed "Galvanizing Vent Hole" to "Galvanizing Hole" in Section B-B to reflect hole use as a galvanizing drain hole. Revised Section B-B post-to-base-plate weld symbol to show a standard-sized backing element. Changed "Full-Penetration Groove Weld" to "Complete-Joint-Penetration Groove Weld" to conform to AWS nomenclature.
- Revised 06-2025: This sheet reissued, sheet format update.
- steeloverheadsigntrusses.dgn - SOST-06-11 - This sheet issued 09-2011.