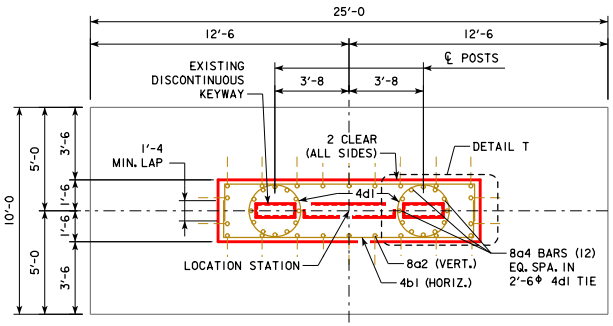

PLAN

8a2, 8a4, APPLICABLE 4b1 AND APPLICABLE 4d1 BARS ARE TO BE PROVIDED, TRANSPORTED, AND STOCKPILED AS DIRECTED BY THE ENGINEER DURING STAGE 1. OBTAIN, TRANSPORT AND PLACE 8a2, 8a4, APPLICABLE 4b1 AND APPLICABLE 4d1 BARS AS DIRECTED BY THE ENGINEER DURING STAGE 2.

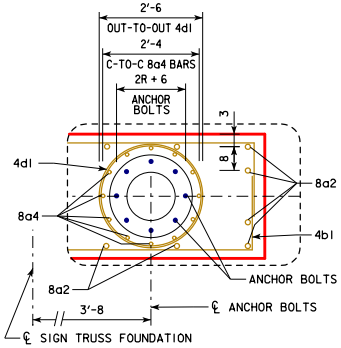

DETAIL T

ANCHOR BOLT AND ANCHOR REINFORCING LOCATION

KEYWAY NOT SHOWN

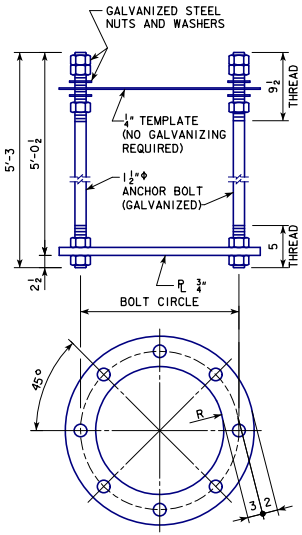

ANCHOR BOLT ASSEMBLY

WEIGHT OF ONE ANCHOR BOLT ASSEMBLY (INCLUDES TEMPLATE, EXCLUDES GALVANIZING WEIGHT)

50'-100' SPANS: 388 LBS.
105'-130' SPANS: 397 LBS.

GENERAL NOTES:

STRUCTURAL CONCRETE, CLASS C, SHALL BE USED FOR THE FOUNDATION.

TWO ANCHOR BOLT ASSEMBLIES INCLUDING ANCHOR PLATES, TEMPLATES, NUTS (5 PER BOLT) AND WASHERS (2 PER BOLT) ARE REQUIRED PER FOUNDATION.

ALL ANCHOR BOLT MATERIALS AND GALVANIZING SHALL BE IN ACCORDANCE WITH ARTICLE 4187.01, C, 3 OF THE STANDARD SPECIFICATIONS.

ALL MECHANICAL SPLICE ASSEMBLIES, 8a2, 8a4, 4b1 and 4d1 BARS SHALL HAVE BEEN FURNISHED IN STAGE 1. A TOTAL OF 46 MECHANICAL SPLICES SHALL HAVE BEEN EMBEDDED IN THE TOP OF THE STAGE 1 FOUNDATION STEM WALL. OBTAIN, TRANSPORT AND PLACE 8a2, 8a4, APPLICABLE 4b1 AND APPLICABLE 4d1 BARS AS DIRECTED BY THE ENGINEER IN STAGE 2.

A RODENT GUARD SHALL BE PLACED AROUND THE BASE PLATE AS DETAILED HEREON.

SEE STANDARD SHEET SOST-19-11 FOR CLARIFICATION OF STAGE 2 FOUNDATION CONSTRUCTION ACTIVITIES AND PRICE BID FOR CONTRACT ITEMS.

	R	BOLT CIRCLE DIAMETER
FOR 14"Φ POSTS (50'-100' SPANS)	7	1'-8
FOR 16"Φ POSTS (105'-130' SPANS)	8	1'-10

CONCRETE PLACEMENT QUANTITIES

ONE FOUNDATION - STAGE 2

ITEM	C.Y.
WALL (STAGE 2)	$(38.5 \times H_2)/27$, H_2 IN FT.
FOOTING	---
TOTAL	$(38.5 \times H_2)/27$, H_2 IN FT.

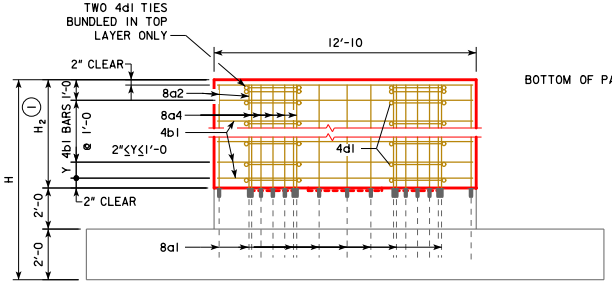

SIDE ELEVATION

① H_2 SHALL NOT EXCEED 8'-6 NOR BE LESS THAN 5'-0.

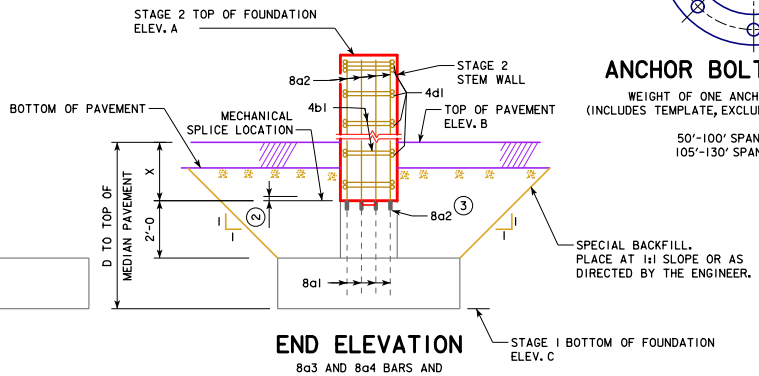

END ELEVATION

8a3 AND 8a4 BARS AND KEYWAY NOT SHOWN

② ½" THICK PLYWOOD REMOVED FOR CONSTRUCTION OF STAGE 2.

③ THE 8a2 AND 8a4 BARS SHALL BE SPLICED AT THE LOCATIONS SHOWN USING MECHANICAL SPLICE ASSEMBLIES. MECHANICAL SPLICES SHALL BE SELECTED DURING STAGE 1 FROM MATERIALS I.M. 451 APPENDIX E TO ENABLE THE SPLICE TO BE FLUSH WITH THE TOP OF THE STAGE 1 STEM WALL. THE TOP OF THE STAGE 1 FOUNDATION STEM WALL WILL BE TEMPORARILY COVERED WITH A ½" THICK PLYWOOD SHEET TO KEEP THE CONCRETE SURFACE AND MECHANICAL SPLICES CLEAN.

TOP-OF-WALL ELEVATION IS TO BE SET AT SAME ELEVATION AS HIGH POINT ON ROADWAY OR AS DIRECTED BY THE ENGINEER

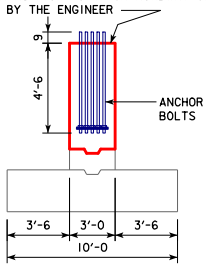

END ELEVATION

ANCHOR BOLTS

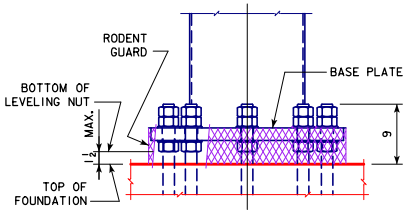

POST BASE DETAIL

SHOWING THE RODENT GUARD

THE RODENT GUARD SHALL BE PLACED AROUND THE BASE PLATE.

THE RODENT GUARD IS STAINLESS STEEL STANDARD GRADE WIRE CLOTH, ¼" MAXIMUM OPENING WITH A MINIMUM WIRE DIAMETER OF AWG NO. 16 WITH A MINIMUM 2" LAP.

SECURE WIRE CLOTH TO BASE PLATE AFTER ERECTION WITH ¾" STAINLESS STEEL BANDING. THE RODENT GUARD SHALL NOT EXTEND ABOVE THE TOP OF THE BASE PLATE.

ELEV. A = STAGE 2 TOP OF FOUNDATION ELEVATION
ELEV. B = TOP OF PAVEMENT ELEVATION
ELEV. C = STAGE 1 BOTTOM OF FOUNDATION ELEVATION
ELEV. C SHOULD BE SET SO THAT (ELEV. A - ELEV. C) IS A MULTIPLE OF 1'-0.

D = (ELEV. B - ELEV. C)
X SHALL NOT BE LESS THAN 2'-0.
Y SHALL NOT BE LESS THAN 2" NOR GREATER THAN 1'-0.

ELEV. A, ELEV. B AND ELEV. C SHALL BE AS SHOWN ELSEWHERE IN THESE PLANS.

WORK THIS SHEET WITH STANDARD SHEETS SOST-19-11 "STAGED FOUNDATION CONSTRUCTION NOTES" AND SOST-20-11 "STAGE 1 FOUNDATION DETAILS".

03-2019
LATEST REVISION DATE

APPROVED BY BRIDGE ENGINEER

IOWA DOT Highway Division

STANDARD DESIGN

STEEL OVERHEAD SIGN TRUSS

SEPTEMBER, 2011

STAGE 2 FOUNDATION DETAILS

50'-130' SPANS

SOST-21-11

- REVISED 03-2019: SHEET RENAMED FROM SOST-20-11 TO SOST-21-11. MODIFIED GENERAL NOTES TO IMPROVE CLARITY. ADDED ANCHOR BOLT ASSEMBLY WEIGHTS. ADDED H (TOTAL FOUNDATION HEIGHT) AND H2 (STAGE 2 STEM WALL HEIGHT) DIMENSIONS TO SIDE ELEVATION TO IMPROVE CLARITY. REMOVED SIDE ELEVATION NOTE ERRONEOUSLY STATING THAT MECHANICAL SPLICES ARE NOT SHOWN. INCREASED SPECIAL BACKFILL EXTENTS SHOWN IN END ELEVATION TO IMPROVE CONSTRUCTABILITY. REVISED X DIMENSION LOWER LIMIT TO SIMPLIFY DESIGN. REPLACED NOTE IDENTIFIER ASTRISK AND TRIANGLE WITH ENCIRCLED NUMBERS TO IMPROVE READABILITY. UPDATED BRIDGE ENGINEER SIGNATURE.
- STEELOVERHEADSIGNTRUSS.DGN - SOST-21-11 - THIS SHEET ISSUED 03-2013. THIS SHEET RENAMED FROM SOST-20-11 TO SOST-21-11 ON 02-2019.