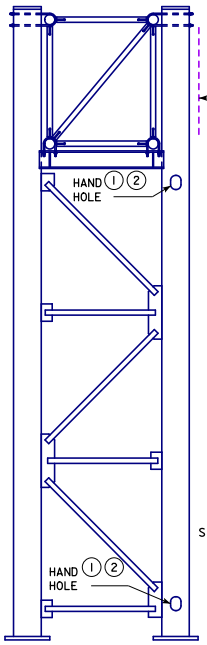

LEFT

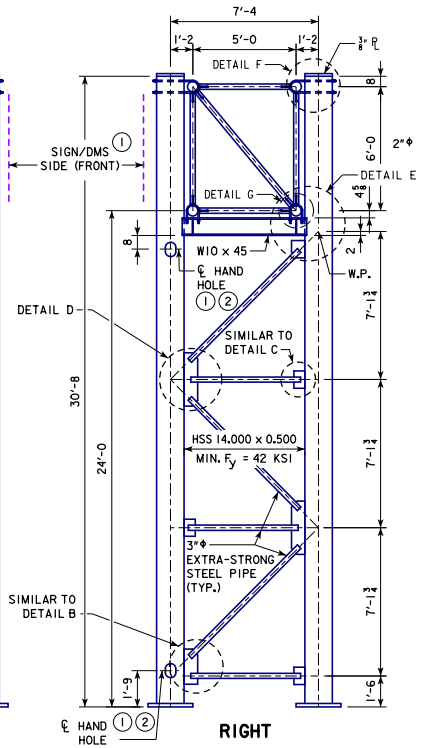

RIGHT

END VIEW OF TRUSS SUPPORTS

② HAND HOLES SHALL BE LOCATED ONLY IN POSTS THAT ARE CLOSEST TO DYNAMIC MESSAGE SIGN AND BE POSITIONED ON SIDE OPPOSITE TRAFFIC.

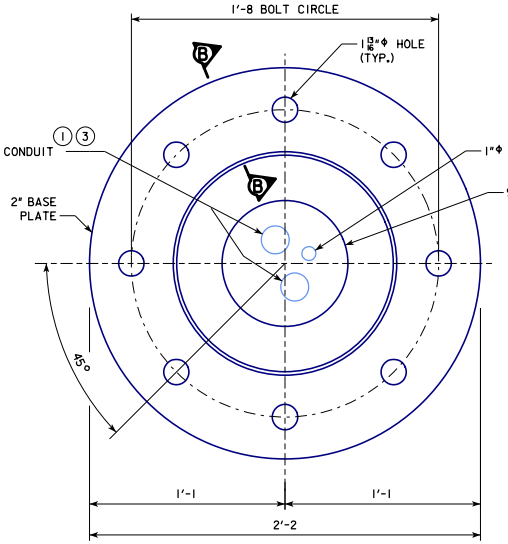

BASE PLATE PLAN

③ CONDUIT IS PRESENT ONLY IN POSTS WITH HAND HOLES.

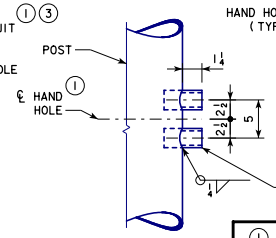

ELECTRICAL INLET

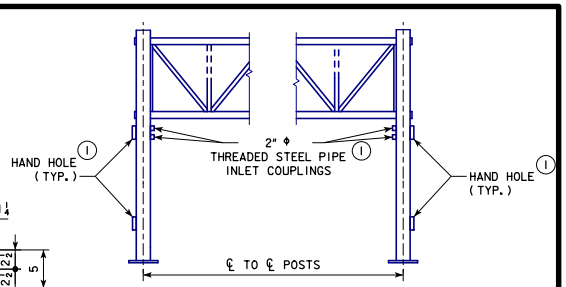

PART ELEVATION

① FOR DMS TRUSSES ONLY

HAND HOLES, CONDUIT, AND PIPE INLET COUPLINGS ARE TO BE INCLUDED ON DMS TRUSS DESIGNS ONLY. SEE STANDARD SHEET SOST-18-11 FOR FOUNDATION CONDUIT LOCATION DETAILS.

HAND HOLES AND ELECTRICAL INLET HOLES SHALL BE LOCATED IN BOTH TRUSS SUPPORTS UNLESS OTHERWISE INDICATED ON DETAIL PROJECT PLANS. LOCATE HOLES ONLY IN POSTS THAT ARE CLOSEST TO DYNAMIC MESSAGE SIGN.

THREADED STEEL PIPE INLET COUPLINGS ARE TO BE PLACED OPPOSITE TO UPPER HAND HOLE ON POST. COUPLINGS SHALL BE FITTED WITH STANDARD PLUGS UNTIL CONDUIT IS INSTALLED.

ALL CONDUIT SHALL BE SCHEDULE 40 PLASTIC.

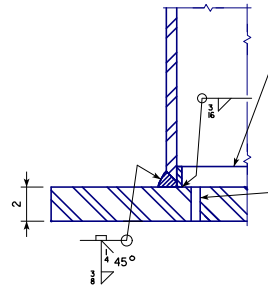

SECTION B-B

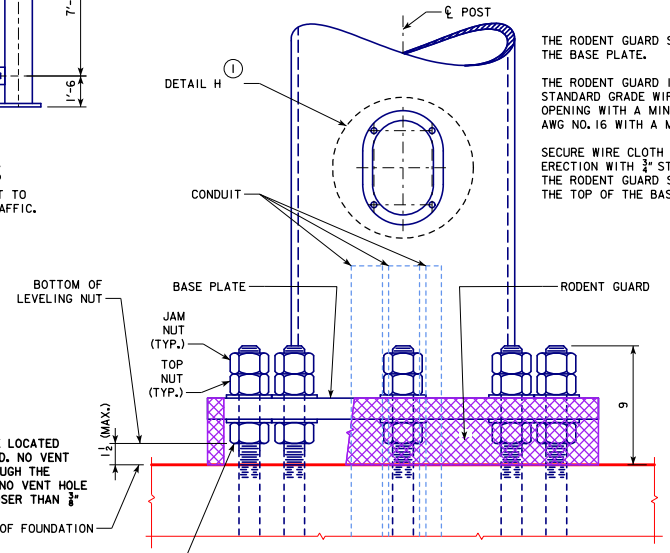

THE RODENT GUARD SHALL BE PLACED AROUND THE BASE PLATE.

THE RODENT GUARD IS STAINLESS STEEL STANDARD GRADE WIRE CLOTH, 1/4" MAXIMUM OPENING WITH A MINIMUM WIRE DIAMETER OF AWG NO. 16 WITH A MINIMUM 2" LAP.

SECURE WIRE CLOTH TO BASE PLATE AFTER ERECTION WITH 3/4" STAINLESS STEEL BANDING. THE RODENT GUARD SHALL NOT EXTEND ABOVE THE TOP OF THE BASE PLATE.

SEE STANDARD SHEET SOST-08-11 FOR DETAILS B, C, D AND E.

SEE STANDARD SHEET SOST-09-11 FOR DETAILS F AND G.

BASE SIDE VIEW

OPPOSITE OF TRAFFIC SIDE

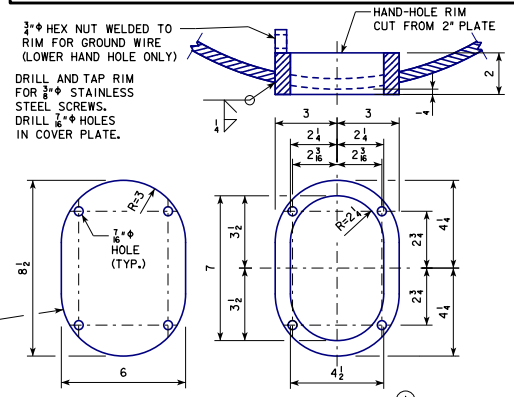

PL 3/8" x 6" x 0'-8 1/2 GALVANIZED STEEL COVER PLATE WITH 1/8" x 6" x 0'-8 1/2 NEOPRENE GASKET TO MATCH PLATE

DETAIL H ①

03-2019 LATEST REVISION DATE	APPROVED BY BRIDGE ENGINEER	IOWA DOT Highway Division
		STANDARD DESIGN
		STEEL OVERHEAD SIGN TRUSS
		SEPTEMBER, 2011
		SUPPORT POST BASE AND DMS ELECTRICAL ACCESS DETAILS — 50'-100' SPANS
		SOST-06-11

•REVISED 07-2017: MODIFIED NOTES. CHANGED CALLOUT "DETAIL D" (WAS "SIMILAR TO DETAIL D") TO CONFORM TO CHANGE OF DETAIL D ON SOST-08-11. ADDED ΔΔ TO 1" CONDUIT CALLOUT. IN "BASE SIDE VIEW" ADDED "JAM NUT" CALLOUTS.
•REVISED 03-2019: INCREASED DIAMETER OF GALVANIZING VENT HOLE IN BASE PLATE FROM 3/8" TO 1" TO IMPROVE CONSTRUCTIBILITY. ADDED NOTE TO CLARIFY THAT HEX NUT WELDED TO HAND HOLE FRAME IS FOR LOWER HAND HOLE ONLY. REPLACED NOTE IDENTIFIER ASTRISKS AND TRIANGLES WITH ENCIRCLED NUMBERS TO IMPROVE READABILITY. UPDATED BRIDGE ENGINEER SIGNATURE.
•STEELOVERHEADSIGNTRUSS.DGN - SOST-06-11 - THIS SHEET ISSUED 09-2011.