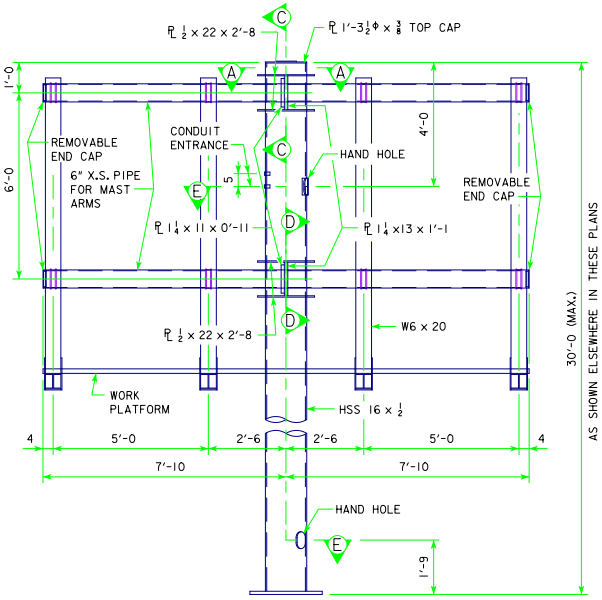

ELEVATION VIEW

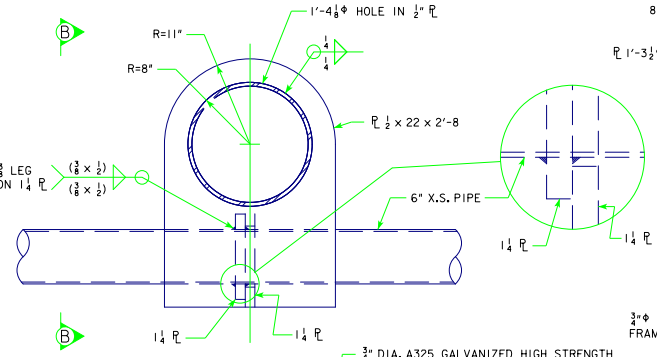

SECTION A-A

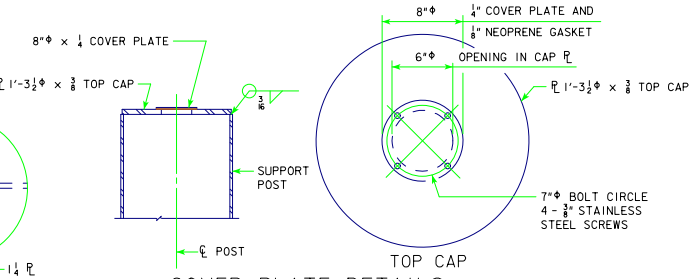

COVER PLATE DETAILS

3/4" DIA. A325 GALVANIZED HIGH STRENGTH BOLTS SHALL BE IN ACCORDANCE WITH ARTICLE 2408.03, S, OF THE STANDARD SPECIFICATIONS. 8 BOLTS REQUIRED PER SUPPORT STRUCTURE, 16 HARDENED WASHERS REQUIRED PER SUPPORT STRUCTURE. HARDENED WASHERS WILL BE PROVIDED UNDER BOTH HEAD AND NUT OF BOLTS. 8 - 3/4" DIA. HEAVY HEX NUTS REQUIRED PER SUPPORT STRUCTURE. DRILL 4 - 13/16" DIA. HOLES IN EACH 1 1/4" VERTICAL PLATE. HIGH STRENGTH BOLTS SHALL BE TENSIONED BY TURN-OF-NUT METHOD.

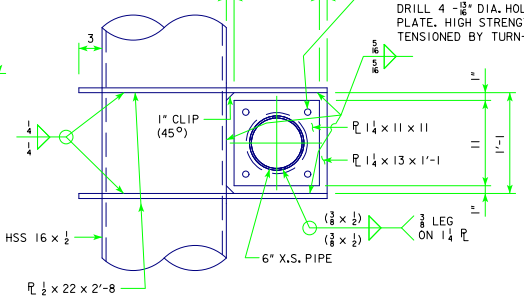

SECTION B-B

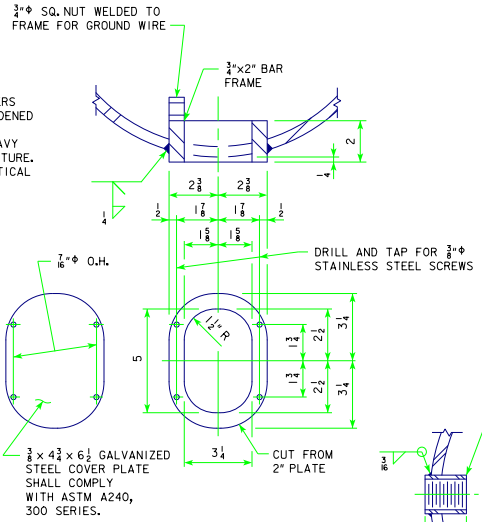

DETAIL "B"

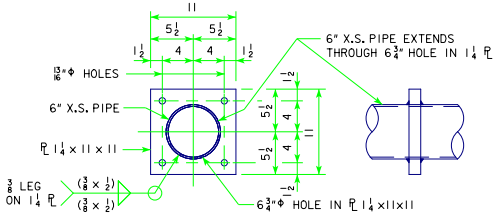

SECTION C-C

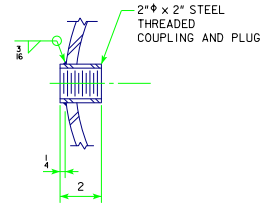

DETAIL "C"

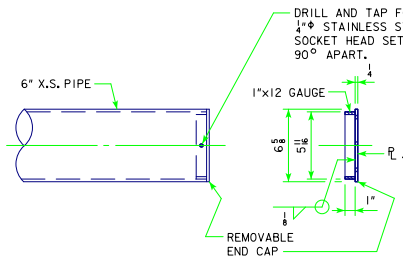

END CAP DETAIL

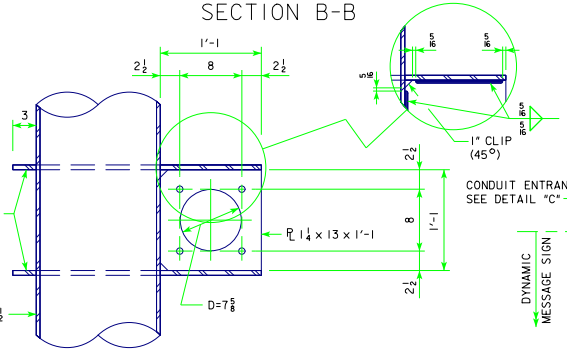

SECTION D-D
(6" X.S. PIPE NOT SHOWN)

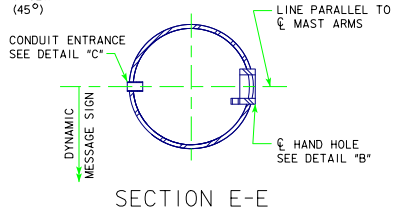

SECTION E-E

LATEST REVISION DATE	APPROVED BY BRIDGE ENGINEER	Iowa Department of Transportation Highway Division
		STANDARD DESIGN ROADSIDE DYNAMIC MESSAGE SIGN (D.M.S.) SUPPORT SEPTEMBER, 2010
		FRAME & POST DETAILS — DMS-SS2-10