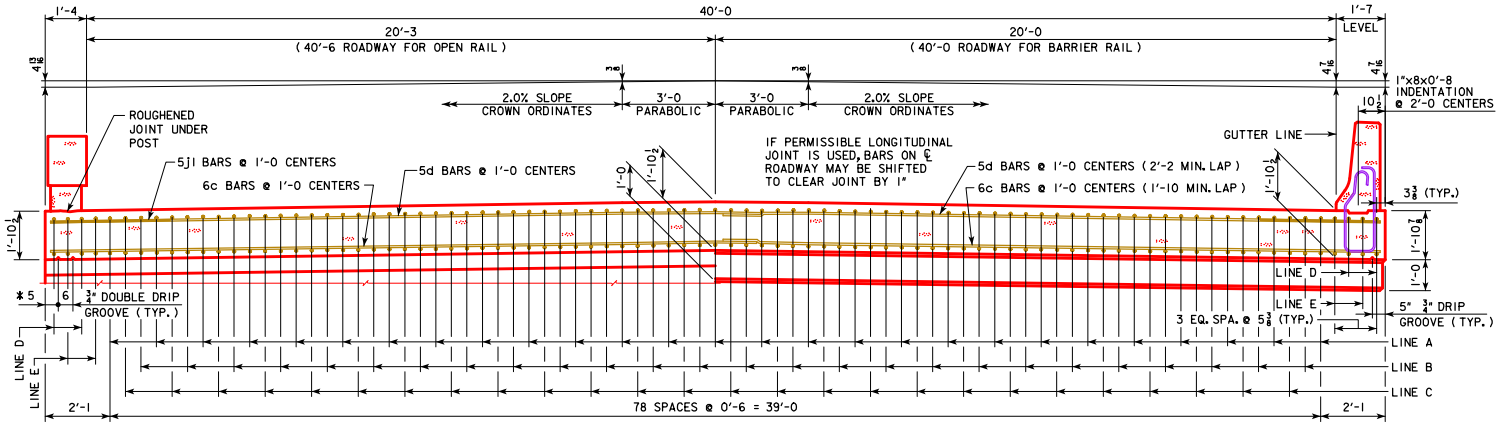

* NOTE: DOUBLE DRIP GROOVES FOR OPEN RAIL OPTION ONLY.

HALF SECTION NEAR ABUTMENT

SLAB CROSS-SECTIONAL AREA FOR OPEN RAIL = 80.94 SQ. FT.

NOTE: TOP LONGITUDINAL REINFORCING STEEL IS TO BE PARALLEL TO AND 2½" CLEAR BELOW TOP OF SLAB. BOTTOM LONGITUDINAL REINFORCING STEEL IS TO BE PARALLEL TO AND 1½" CLEAR ABOVE BOTTOM OF SLAB. REINFORCING STEEL IS TO BE SECURELY WIRED IN PLACE AND ADEQUATELY SUPPORTED ON BAR CHAIRS BEFORE CONCRETE IS POURED. I.M. 451.01 REQUIREMENTS SHALL APPLY FOR BAR CHAIRS.

HALF SECTION NEAR PIER

SLAB CROSS-SECTIONAL AREA FOR BARRIER RAIL = 80.99 SQ. FT.

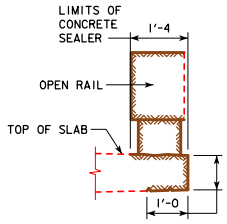

CONCRETE SEALER LIMITS FOR OPEN RAILS

CONCRETE SEALER SHALL BE APPLIED TO BOTH SIDES OF BRIDGE SLAB ON THE TOP, EDGE OF SLAB AND UNDER THE SLAB. THE CONCRETE SEALER SHALL ALSO BE APPLIED TO THE OPEN RAIL ON THE TOP, TRAFFIC FACE SIDE, BOTTOM OF RAIL, AND ON ALL SIDES OF THE OPEN RAIL POSTS.

THE CONCRETE SEALER LIMITS ARE SHOWN IN THE DETAIL AND SHALL APPLY TO THE FULL LENGTH OF BRIDGE. CONCRETE SEALER SHALL BE APPLIED IN ACCORDANCE WITH ARTICLE 2403.03, P, 3 OF THE STANDARD SPECIFICATIONS.

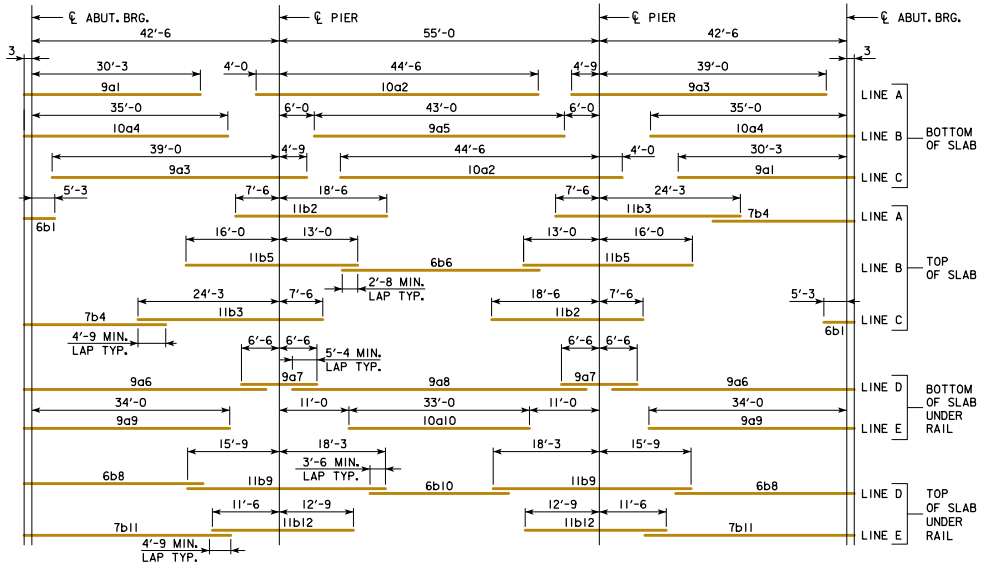

PLACEMENT FOR LONGITUDINAL REINFORCEMENT

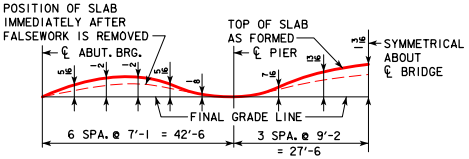

FORM CAMBER DIAGRAM

THIS DIAGRAM SHOWS THE FORM CAMBER REQUIRED TO COMPENSATE FOR THE ANTICIPATED ULTIMATE DEAD LOAD DEFLECTION. THE ABOVE DIMENSIONS DO NOT INCLUDE ANY ALLOWANCE FOR FORM DEFLECTION OR FALSEWORK SETTLEMENT.

08-2020 LATEST REVISION DATE

APPROVED BY BRIDGE ENGINEER

IOWADOT Highway Division

STANDARD DESIGN - 40' ROADWAY, 3 SPAN BRIDGES

CONTINUOUS CONCRETE SLAB BRIDGES

JULY, 2014

SUPERSTRUCTURE DETAILS 140'-0 BRIDGE

J40-16-14

REVISED 08-2020: UPDATED BRIDGE ENGINEER SIGNATURE. ADDED 3⅜" (TYP.) & 5⅜" (TYP.) HORIZONTAL DIMENSIONS TO LONGITUDINAL SLAB REINFORCING LINE D & E IN "HALF SECTION NEAR PIER".