For joint details, refer to PV-101.

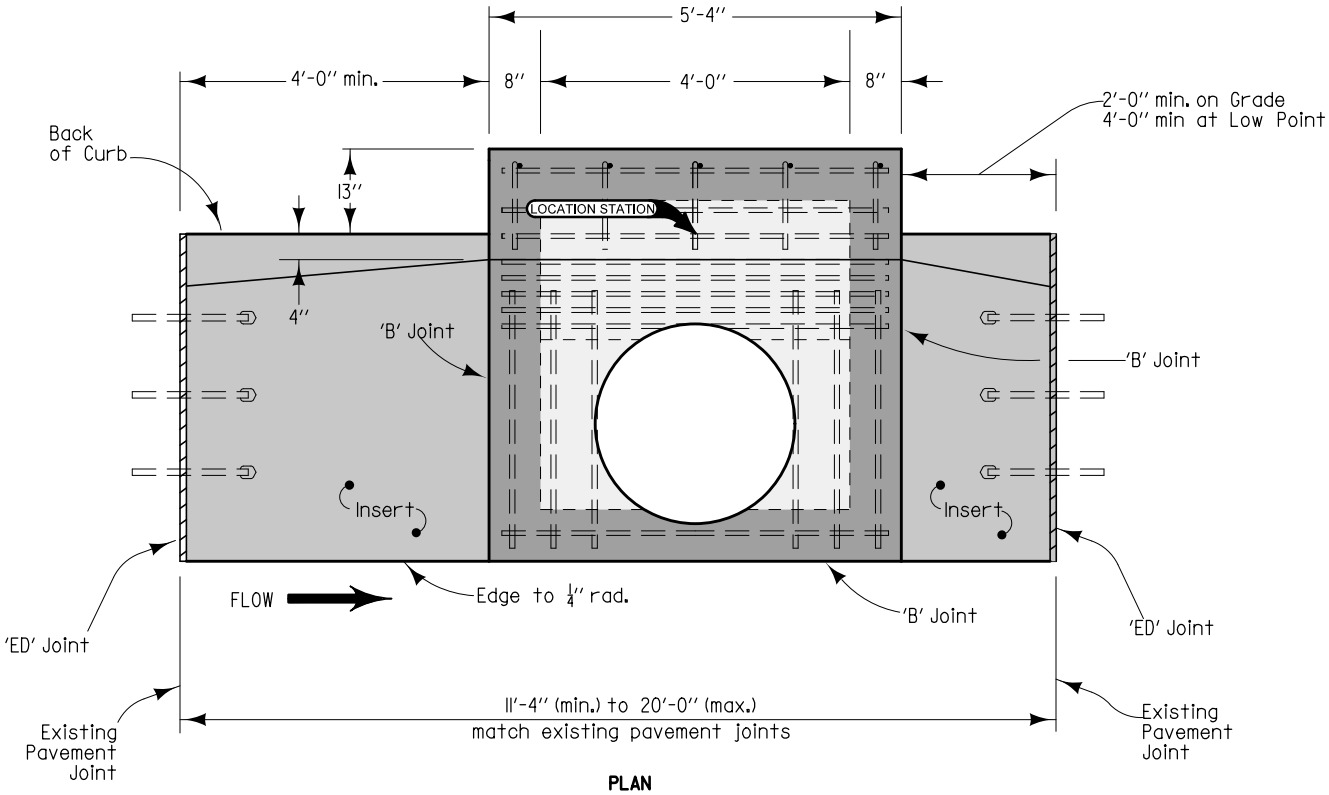

PLAN

Possible Contract Item:
Intake, SW-541

Possible Tabulation:
104-5B

Iowa Department of Transportation

STANDARD ROAD PLAN

REVISION	
3	10-16-12

SW-541

SHEET 1 of 2

REVISIONS: Added Possible Contract Item and Possible Tabulation. Clarified 13" dimension in PLAN view.

Deanna Maifield
APPROVED BY DESIGN METHODS ENGINEER

OPEN-THROAT CURB INTAKE UNDER PAVEMENT

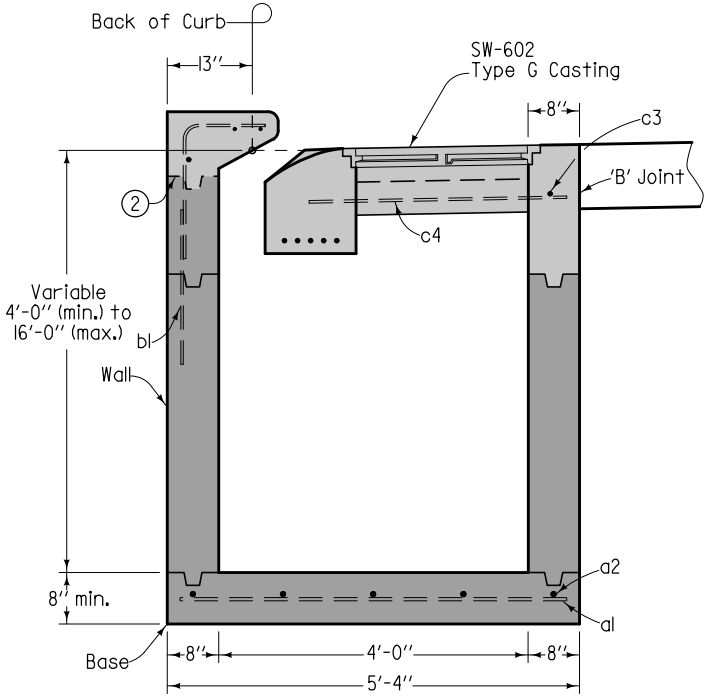

TYPICAL SECTION

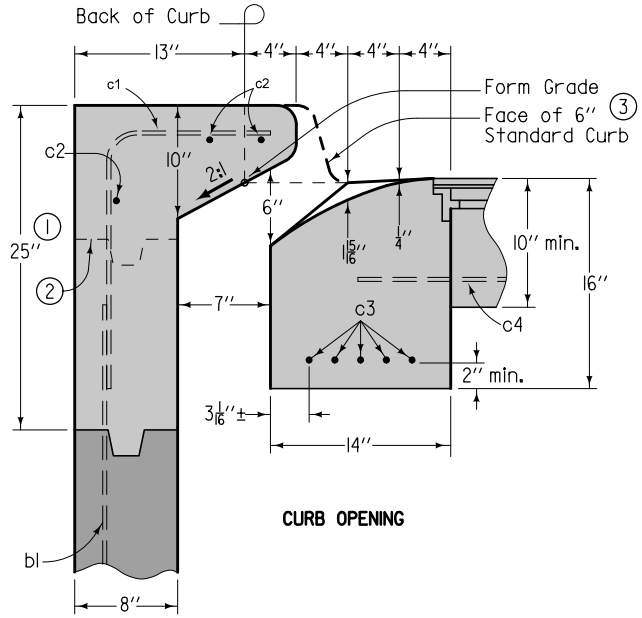

CURB OPENING

1. 39 inches when attaching the SW-542 extension unit.
2. Additional keyed construction joint when attaching the SW-542 extension unit.
3. Modify dimensions as required to accommodate other curb heights when specified.

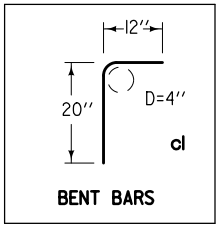

BENT BARS

REINFORCING BAR LIST					
Mark	Size	Location	Shape	Length	Spacing
a1	4	Base	——	5'-0''	14''
a2	4	Base	——	5'-0''	14''
b1	4	Wall	——	3'-0''	14''
c1	4	Top	⌐	2'-8''	14''
c2	4	Top	——	5'-0''	See Detail
c3	4	Top	——	5'-0''	See Detail
c4	4	Top	——	3'-4''	See Detail

Iowa Department of Transportation

STANDARD ROAD PLAN

REVISION	
3	10-16-12

SW-541

SHEET 2 of 2

REVISIONS: Added Possible Contract Item and Possible Tabulation. Clarified 13" dimension in PLAN view.

Deanna Maifield
APPROVED BY DESIGN METHODS ENGINEER

OPEN-THROAT CURB INTAKE UNDER PAVEMENT