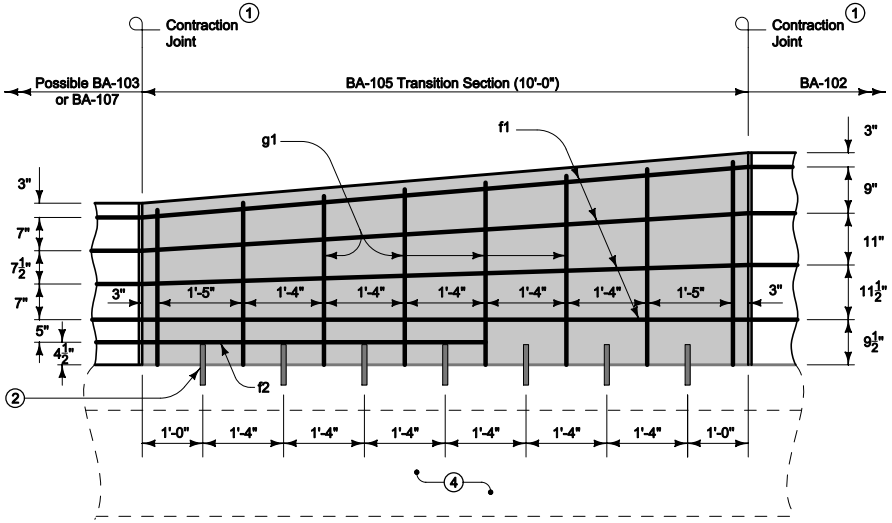

ELEVATION

Use Grade 60 epoxy-coated reinforcing bars. Provide 2 inches minimum cover. Anchor all reinforcement to prevent movement. Secure each section at the front, back, and at 3'-6" intervals using a method approved by the Engineer.

① Where abutting sections are placed as separate pours, a butt joint may be used. Extend longitudinal reinforcement into the abutting section a minimum of 1'-6".

② Use 1 inch diameter deformed dowel bars of sufficient length to ensure 6 inch minimum embedment in barrier and supporting surface. Install dowels either in supporting surface when placed, or in drilled holes using polymer grout complying with Materials I.M. 491.11 or hydraulic cement grout complying with Materials I.M. 491.13.

③ Fillet all exposed corners with a ¾ inch dressed and beveled strip.

④ Construct concrete footing when barrier is not placed on concrete slab. Apply Section 2403.03, but the use of forms is optional. If forms are used, place backfill around the completed footing.

⑤ Place barrier markers at 100 foot increments in areas with non-continuous lighting, or 250 foot increments in areas with continuous lighting. Marker color to be the same as adjacent edge line.

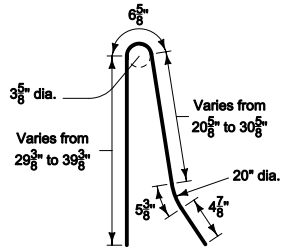

g1
BENT BAR

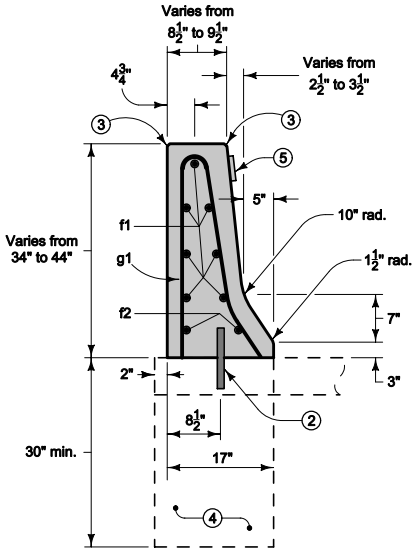

TYPICAL SECTION

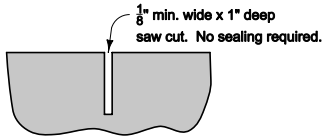

SAWED CONTRACTION JOINT
Saw cut top and front face. Saw cut back if exposed.

REINFORCING BAR LIST for one Transition Section				
Bar	Size	Number of Bars	Length	Weight (lbs.)
g1	5	8	*	53.5
f1	5	7	10'-0"	73.5
f2	5	2	5'-8"	11.8

* Varies from 5'-7" to 7'-3"

CONCRETE QUANTITIES for one Transition Section
1.2 cy

Possible Contract Item:
Concrete Barrier, BA-105 or
Concrete Barrier, BA-105 and Footing

Possible Tabulation:
108-18B

Iowa Department of Transportation

STANDARD ROAD PLAN

REVISION	
New	04-20-10

BA-105
SHEET 1 of 1

REVISIONS: New. Replaces RE-44G.

Deanna Maifield
APPROVED BY DESIGN METHODS ENGINEER

34" TO 44" CONCRETE BARRIER TRANSITION SECTION