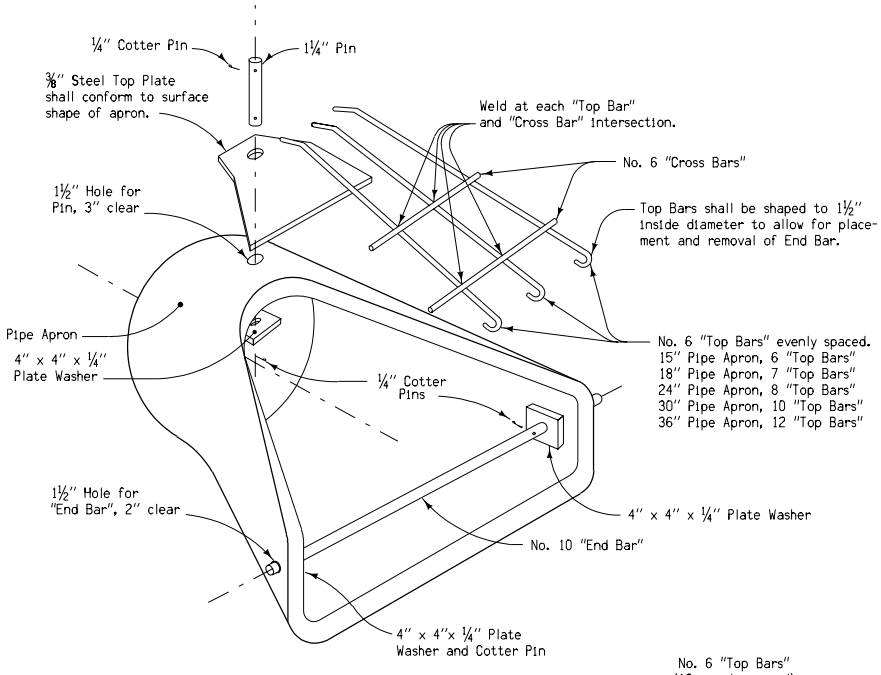

(TYPICAL FOR ALL SIZES OF APRONS)

INSTALLATION VIEW

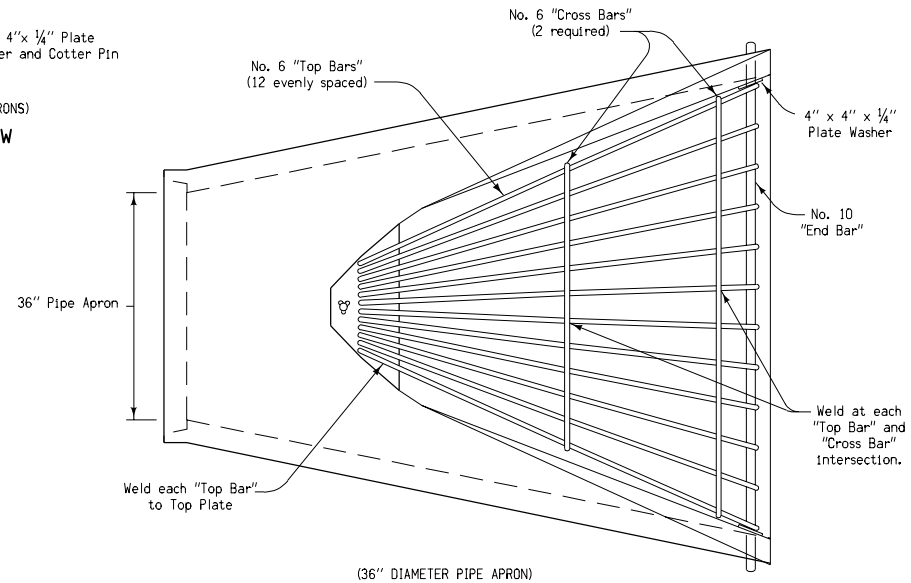

(36" DIAMETER PIPE APRON)

TYPICAL PLAN

GENERAL NOTES:

The intent of the pipe apron guard detailed hereon is to provide a treatment for the exposed end of a pipe culvert, such that an out–of–control vehicle could pass over the end of the culvert without undue loss of control or damage to the vehicle.

Steel bars used in construction of the guard shall be ASTM A 615, Grade 40, or merchant quality, smooth or deformed steel conforming to the fabrication requirements of Section 2404 of the current Standard Specifications.

Welding of steel parts shall be as shown and subject to the approval of the Engineer. The completed apron guard shall be hot–dip galvanized in accordance with current ASTM A 123 Specifications.

Details indicated are for a Type 1 Apron as shown on Standard Road Plan RF–3. Appropriate modification of apron guard shown may be made for a Type 2 Apron.

Alternate details for design of apron guard may be submitted to the Engineer for approval.

SPECIAL NOTE:
When detail project plans require pipe apron guards of sizes other than those shown hereon, the design for such apron guards shall be similar to those indicated, conforming to minimum bar size and spacing, and other general requirements shown.

Iowa Department of Transportation
Highway Division

STANDARD ROAD PLAN | **RF–26**

REVISION: Modify General Notes. No Longer a Bid Item.	REVISION NO. 7
William G. Stein APPROVED BY DESIGN METHODS ENGINEER	REVISION DATE 04-15-03

PIPE APRON GUARD