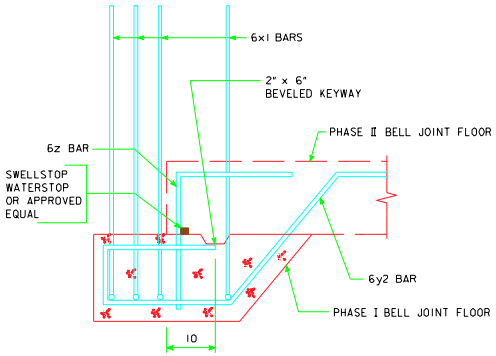

SECTION A-A

BELL JOINT AT FLOOR

COST FOR WATERSTOP CONSIDERED INCIDENTAL TO THE PROJECT.

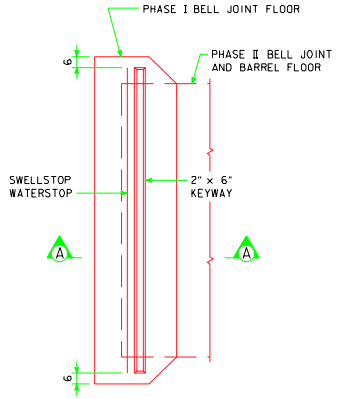

PLAN VIEW - PHASE I

(SHOWING PHASE I OF FLOOR BELL JOINT CONSTRUCTION)

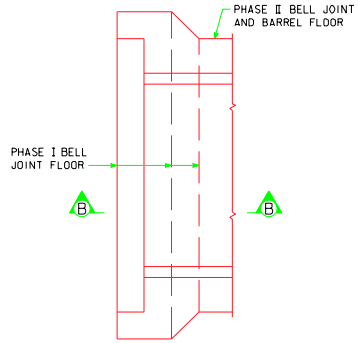

PLAN VIEW - PHASE II

(SHOWING PHASE II OF FLOOR BELL JOINT
AND BARREL FLOOR CONSTRUCTION)

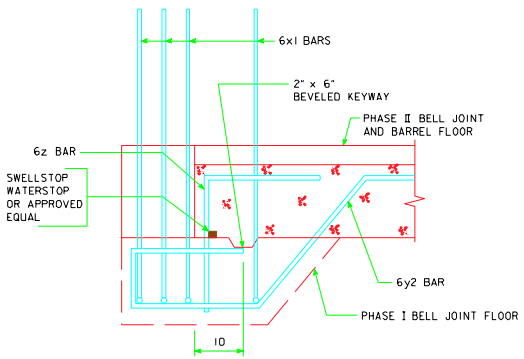

SECTION B-B

BELL JOINT AT FLOOR

COST FOR WATERSTOP CONSIDERED INCIDENTAL TO THE PROJECT.

NOTES:

THE DETAILS SHOWN ON THIS SHEET ARE AN OPTION FOR THE CONTRACTOR TO CONSTRUCT THE FLOOR OF THE BELL JOINT WITH A PERMISSIBLE CONSTRUCTION JOINT AS SHOWN.

REINFORCING STEEL WILL BE PLACED PRIOR TO PLACING THE PHASE I CONCRETE.

THE COST OF THE WATERSTOP IS CONSIDERED INCIDENTAL TO THE PROJECT.

A 2" x 6" BEVELED KEYWAY WILL BE FORMED TO THE DISTANCE SHOWN AND LOCATION NOTED BEFORE PLACING THE CONCRETE.

FOR DETAILS AND DIMENSIONS OF THE BELL JOINT REFER TO THE BELL JOINT STANDARD SHEETS.

LATEST REVISION DATE :

APPROVED BY :

STANDARD DESIGN

PERMISSIBLE CULVERT BELL JOINT

FOR

REINFORCED CONCRETE BOX CULVERTS

ALL SPANS

HIGHWAY DIVISION

IOWA DEPARTMENT OF TRANSPORTATION

APRIL, 2002

CBJ 4-87

CBJ4.SO1.SO1 - 04-02 THIS SHEET ISSUED.

XXXXXXXXXXSYSTEMTIME XXXXXXXUSERNAME XXXXXXXXXX