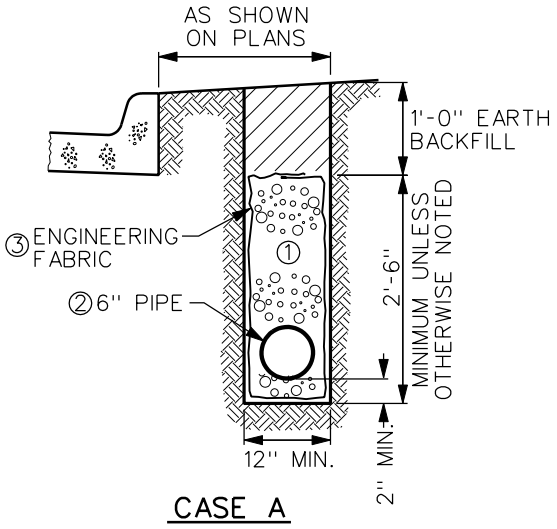

CASE A

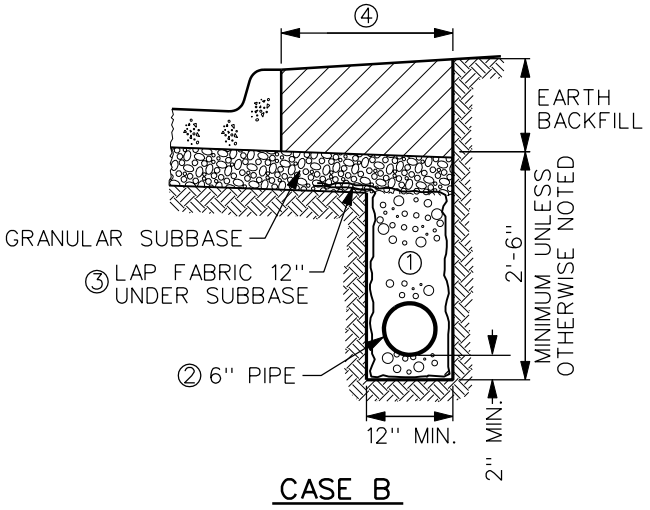

CASE B

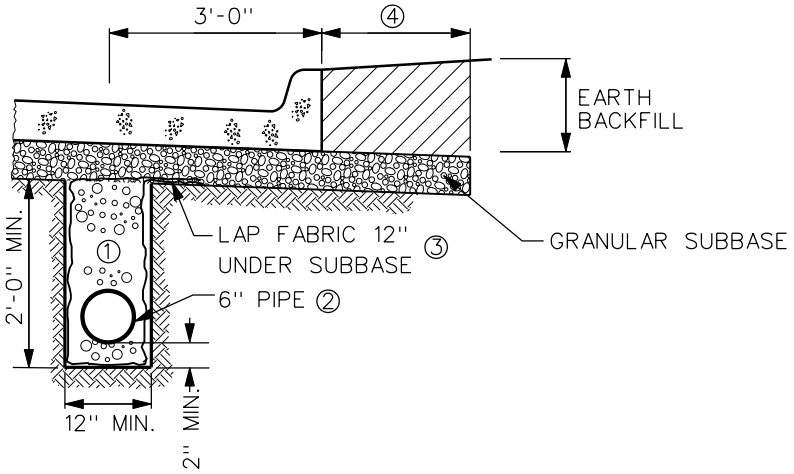

CASE C

NOTES:

① BACKFILL ALL SUBDRAIN WITH POROUS BACKFILL (3010, 2.10).

② PLACE PERFORATIONS DOWN FOR ALL INSTALLATIONS.

③ WHEN SPECIFIED IN THE CONTRACT DOCUMENTS, PLACE ENGINEERING FABRIC AS SHOWN.

④ 2'-0", OR AS SHOWN ON THE PLANS.

REV.	DATE	BY		
1	10/18/05		SUBDRAINS, TYPE I LONGITUDINAL SUBDRAINS	FIGURE: 4020.5A
DATE: 10-19-04				SHEET 1 OF 1