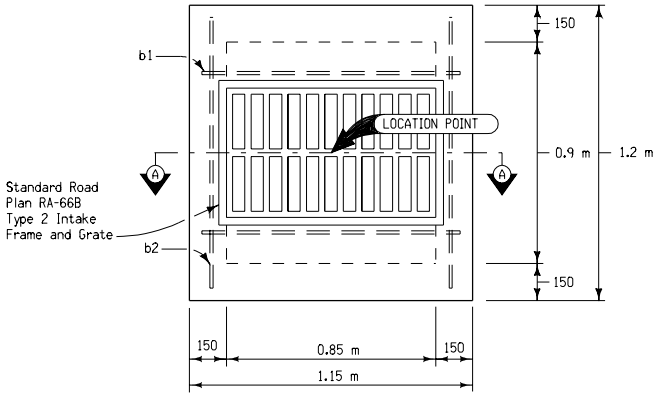

PLAN

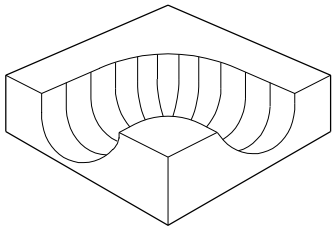

PERSPECTIVE VIEW
OF CONCRETE FILLET

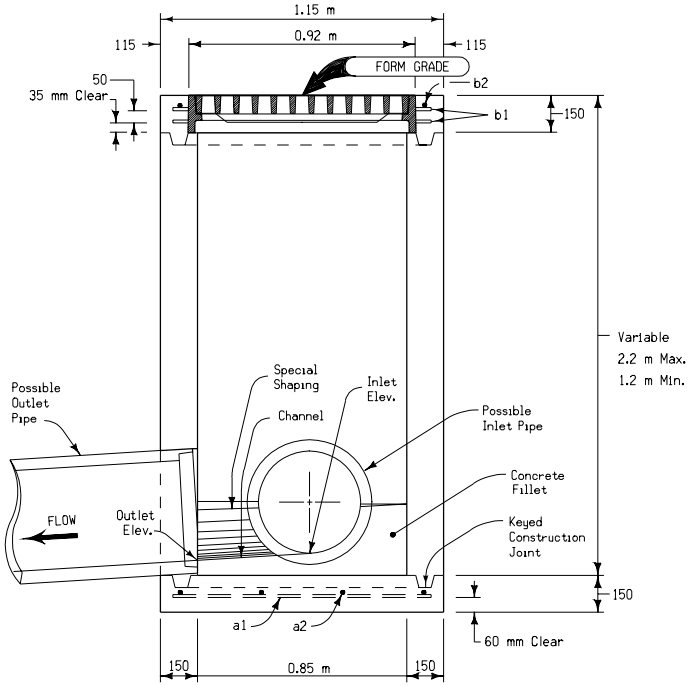

SECTION A-A

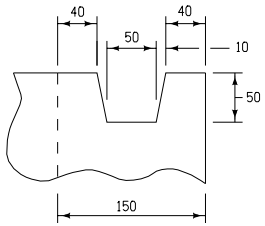

KEYED CONSTRUCTION
JOINT DETAIL

REINFORCING BAR LIST							
MARK	SIZE	LOCATION	SHAPE	NO.	LENGTH	MASS	SPACING
a1	15	Base	———	4	1050	7 kg	330
a2	15	Base	———	4	1100	7 kg	330
b1	15	Top	———	4	1050	7 kg	See Detail
b2	15	Top	———	2	1100	4 kg	See Detail
					Total	25 kg	

GENERAL NOTES:

This detail illustrates the construction and installation of an intake for use in ditches, medians, or other areas not subject to traffic.

All reinforcing bars shall be ASTM A 615, Grade 400.

Precast concrete units with these dimensions may be utilized. The contractor shall be responsible for any additional reinforcement necessary to prevent cracking during transportation and installation.

If unit is cast in place, storm sewer pipe shall be installed before intake sidewall construction is started. Sidewalls shall be constructed as indicated with openings for storm sewer pipe(s) smoothly shaped and inlet pipe(s) not projecting unnecessarily into well. Outlet pipe(s) shall not project beyond inside face of sidewall. Storm sewer pipe locations shown hereon are typical. Refer to details project plans for exact locations.

A concrete fillet shall be placed in the bottom of the intake approximately as indicated. Special shaping of this fillet is required to provide a smooth channel through the Intake. Top surface of the fillet shall slope at a rate of approximately 12:1 (Horizontal: Vertical) toward the channel.

Finish of the Intake top or any exposed portion shall be as required for "Structural Concrete" in current Standard Specifications.

Price bid for "Intake, RA-60" shall include:

A. All necessary excavation and backfill.
B. Satisfactory connection to new or existing storm sewer as per detail plans. Connections to precast units shall be grouted.
C. Furnishing all materials and constructing intake as detailed hereon.

Placing Sequence: 1. Base; 2. Walls; 3. Top

All dimensions given in millimeters unless noted.

M

METRIC VERSION

Iowa Department of Transportation
Highway Division

STANDARD ROAD PLAN | RA-60

REVISION: Require Concrete Fillet.

REVISION NO. 1

REVISION DATE 04-15-03

William J. Stein
APPROVED BY DESIGN METHODS ENGINEER

INTAKE
(DITCH OR MEDIAN)