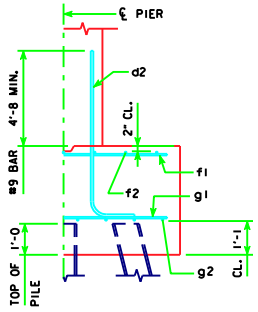

TYPICAL SECTION

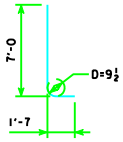

d2

NOTE: D = PIN DIAMETER.
DIMENSIONS ARE OUT TO OUT.

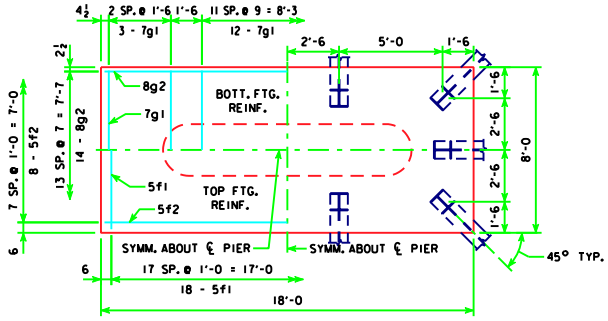

3'-6 x 8'-0 x 18'-0 FOR 10A

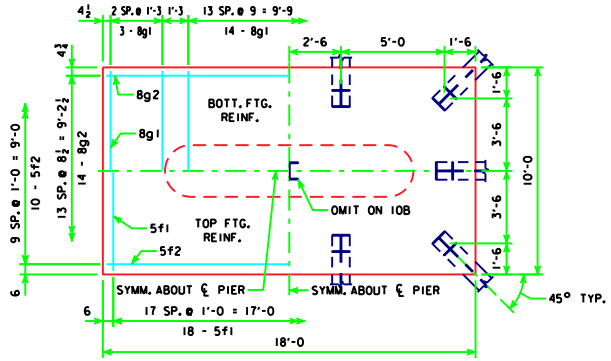

3'-6 x 10'-0 x 18'-0 FOR 10B & 11A

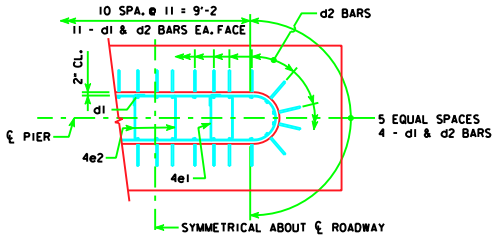

d2 BAR LAYOUT
(SEE SECTION A-A ON SHEET H24-51-06.)

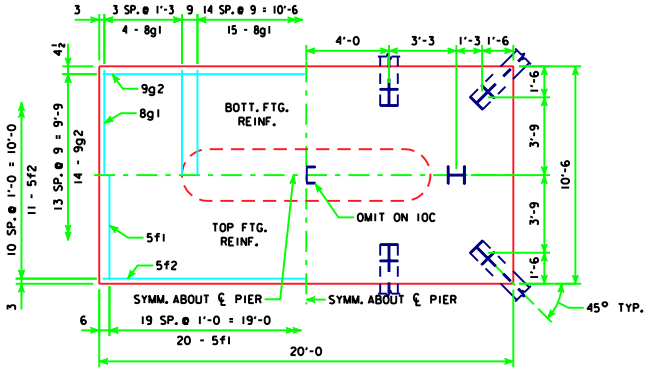

3'-6 x 10'-6 x 20'-0 FOR 10C & 11B

H IN FT.	℄ - ℄ ABUT. BRG.	PILING NO. & LAYOUT	PILING DES. BRG. (TONS)	FOOTING SIZE
16 TO 18	201'-4	10A	45	3'-6 x 8' x 18'
	213'-10	10A	47	
	226'-4	10A	49	
	243'-0	10A	50	
19 TO 21	201'-4	10B	46	3'-6 x 10' x 18'
	213'-10	10B	47	
	226'-4	10B	49	
	243'-0	11A	47	
22 TO 24	201'-4	10C	47	3'-6 x 10'-6 x 20'
	213'-10	10C	48	
	226'-4	10C	50	
	243'-0	11B	48	

FOOTING SIZE	REINFORCING STEEL (ONE FOOTING) BAR	NO., SIZE & SPACING	LENGTH	WEIGHT (LB.)	TOTAL WEIGHT (LB.)	STRUCTURAL CONCRETE (CY)
3'-6 x 8' x 18'	d2	30 - #9 AS SHOWN	8'-7	876	2109	18.7
	f1	18 - #5 @ 1'-0	7'-8	144		
	f2	8 - #5 @ 1'-0	17'-8	147		
	g1	18 - #7 AS SHOWN	7'-8	282		
	g2	14 - #8 @ 0'-7	17'-8	660		
3'-6 x 10' x 18'	d2	30 - #9 AS SHOWN	8'-7	876	2417	23.3
	f1	18 - #5 @ 1'-0	9'-8	181		
	f2	10 - #5 @ 1'-0	17'-8	184		
	g1	20 - #8 AS SHOWN	9'-8	516		
	g2	14 - #8 @ 0'-8½	17'-8	660		
3'-6 x 10'-6 x 20'	d2	30 - #9 AS SHOWN	8'-7	876	2874	27.2
	f1	20 - #5 @ 1'-0	10'-2	212		
	f2	11 - #5 @ 1'-0	19'-8	226		
	g1	23 - #8 AS SHOWN	10'-2	624		
	g2	14 - #9 @ 0'-9	19'-8	936		

FOOTING NOTES:

THESE FOOTINGS ARE DESIGNED AND DETAILED TO BE USED WITH THE CAP AND COLUMN DETAILS OF THE TEE PIERS AS SHOWN ON SHEET H24-51-06.

BATTER PILES IN EXTERIOR ROWS 1:4 IN THE DIRECTION SHOWN.

PIER PILES (HP10x57) ARE TO BE DRIVEN TO THE DESIGN BEARING VALUE.

STEEL PILING USED AS POINT BEARING SHALL HAVE A MINIMUM DISTANCE OF APPROXIMATELY 10 FEET FROM BOTTOM OF FOOTING TO TOP OF BEARING ROCK. THE PILE LAYOUTS ARE SUCH THAT THE DISTANCE CENTER TO CENTER OF ADJACENT PILING SHALL NOT EXCEED 8'-0.

LATEST REVISION DATE

APPROVED BY BRIDGE ENGINEER

Iowa Department of Transportation
Highway Division

STANDARD DESIGN - 24' ROADWAY, THREE SPAN BRIDGE

PRETENSIONED PRESTRESSED CONCRETE BEAM BRIDGES

HL93 SUPERSTRUCTURE DECEMBER, 2006 HS25 SUBSTRUCTURE

TEE PIER - STEEL PILE FOOTINGS, H=16' TO 24'
15° SKEW

H24-52-06