2620
10-15-13

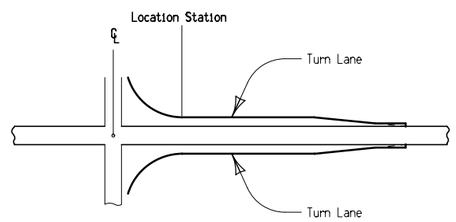


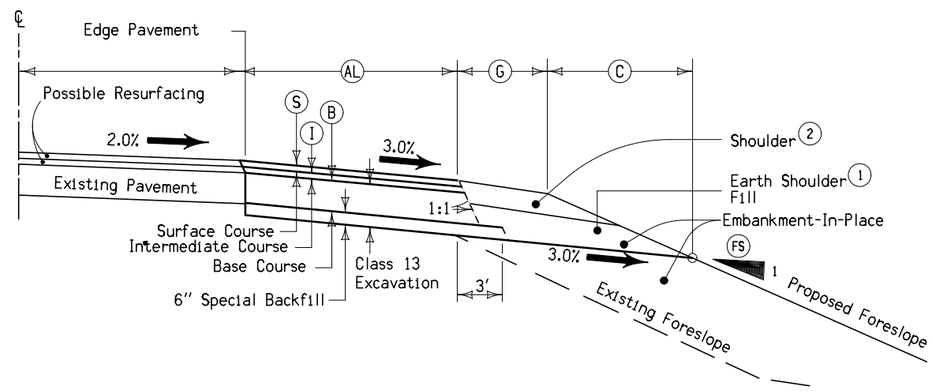


1 Material to be included in the price bid for "Embankment-In-Place" and shaping to be bid as "Earth Shoulder Finishing".

2 Refer to shoulder typicals.

| Station to Station | Side | Direction of Travel | S Inches | I Inches | B Inches | G Feet | C Feet | FS |
|---|---|---|---|---|---|---|---|---|
| | | | | | | | | |
| | | | | | | | | |
| | | | | | | | | |
| | | | | | | | | |
| | | | | | | | | |
| | | | | | | | | |
| | | | | | | | | |
| | | | | | | | | |
| | | | | | | | | |
| | | | | | | | | |
| | | | | | | | | |
| | | | | | | | | |
| | | | | | | | | |
| | | | | | | | | |
| | | | | | | | | |

TYPICAL HALF SECTION
HMA TURN LANE